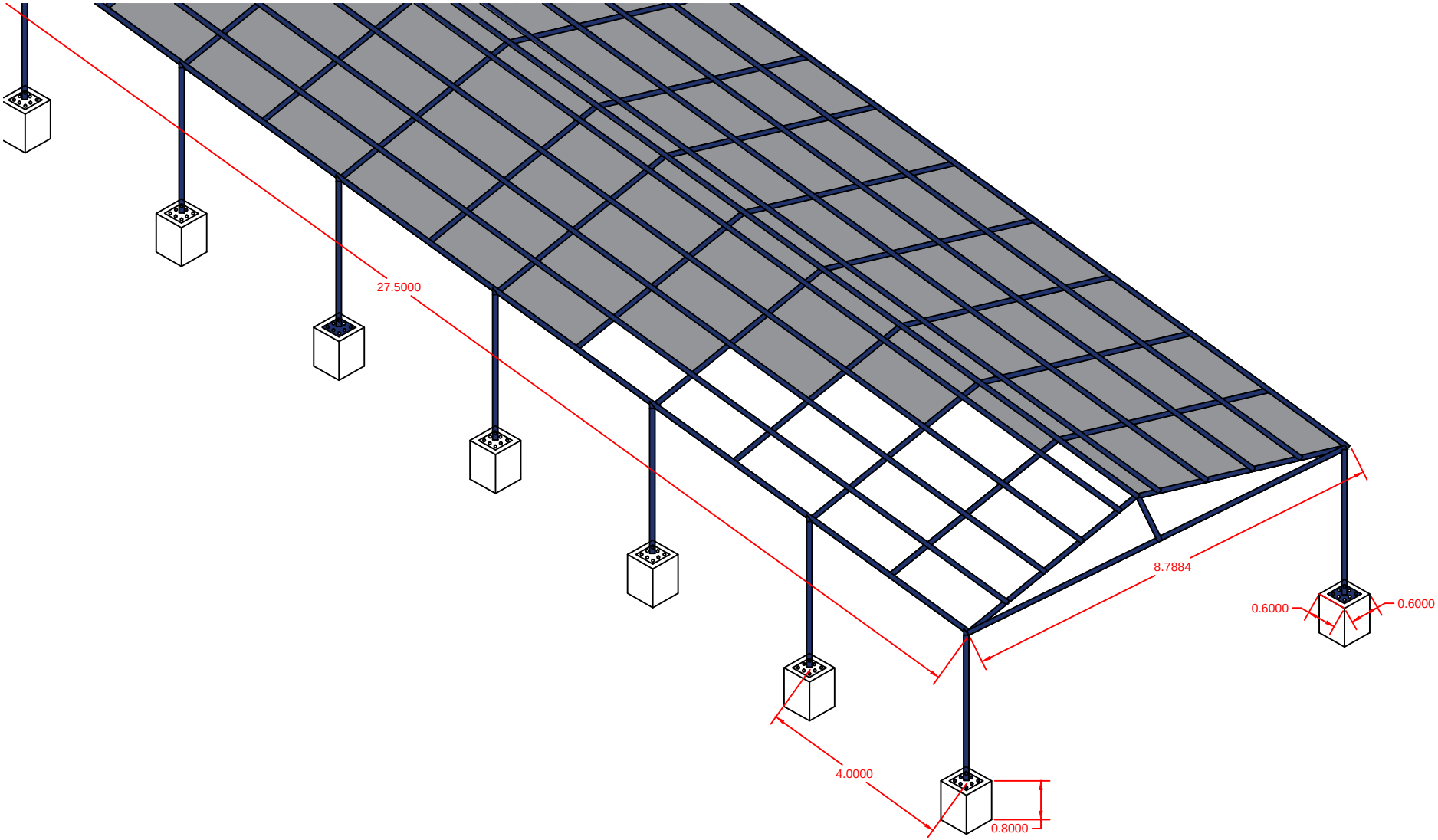
27.5000
8.7884
0.6000
0.6000
4.0000
0.8000

I Beam

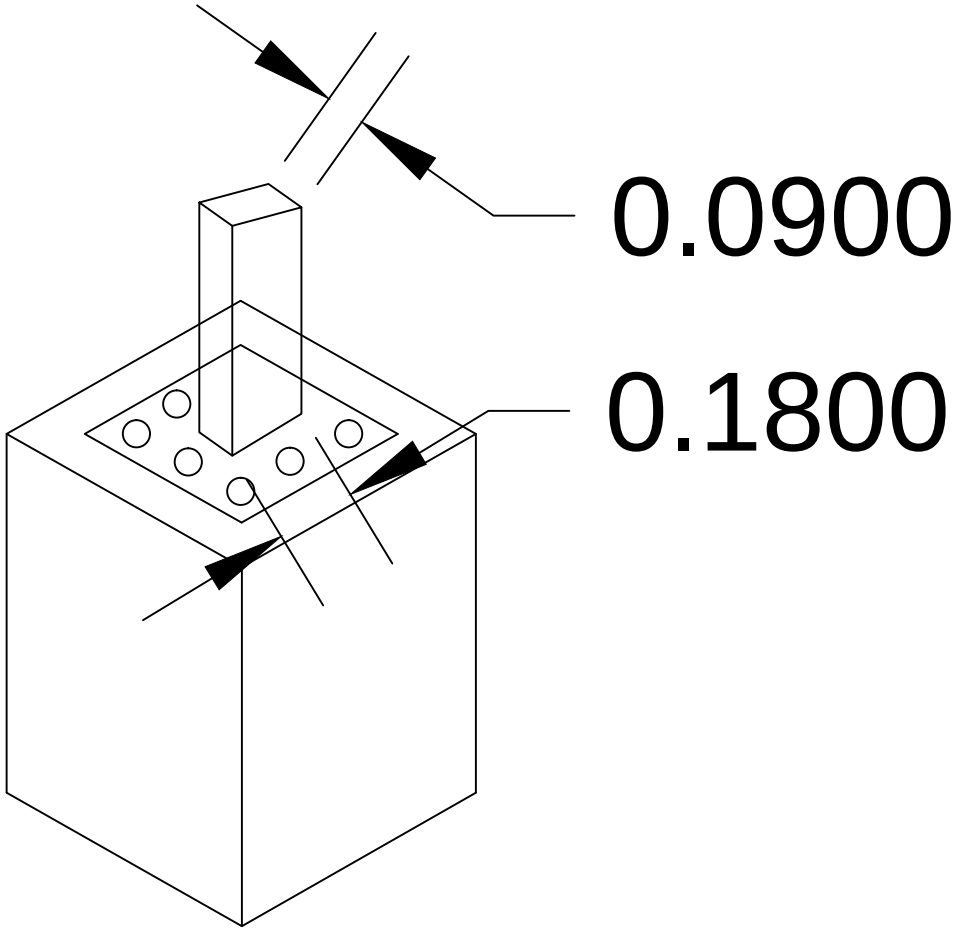

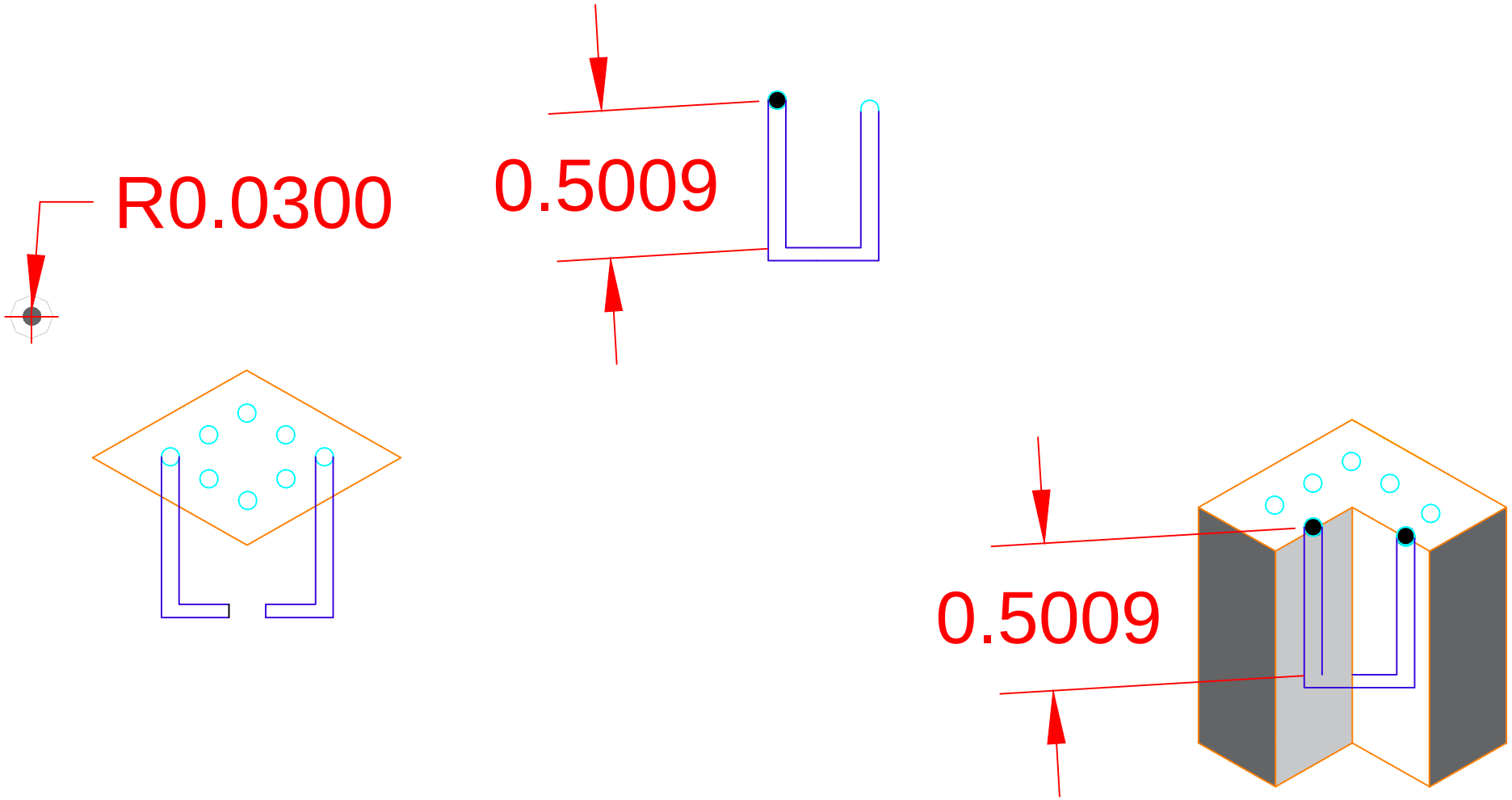
R0.0300
0.5009
0.5009

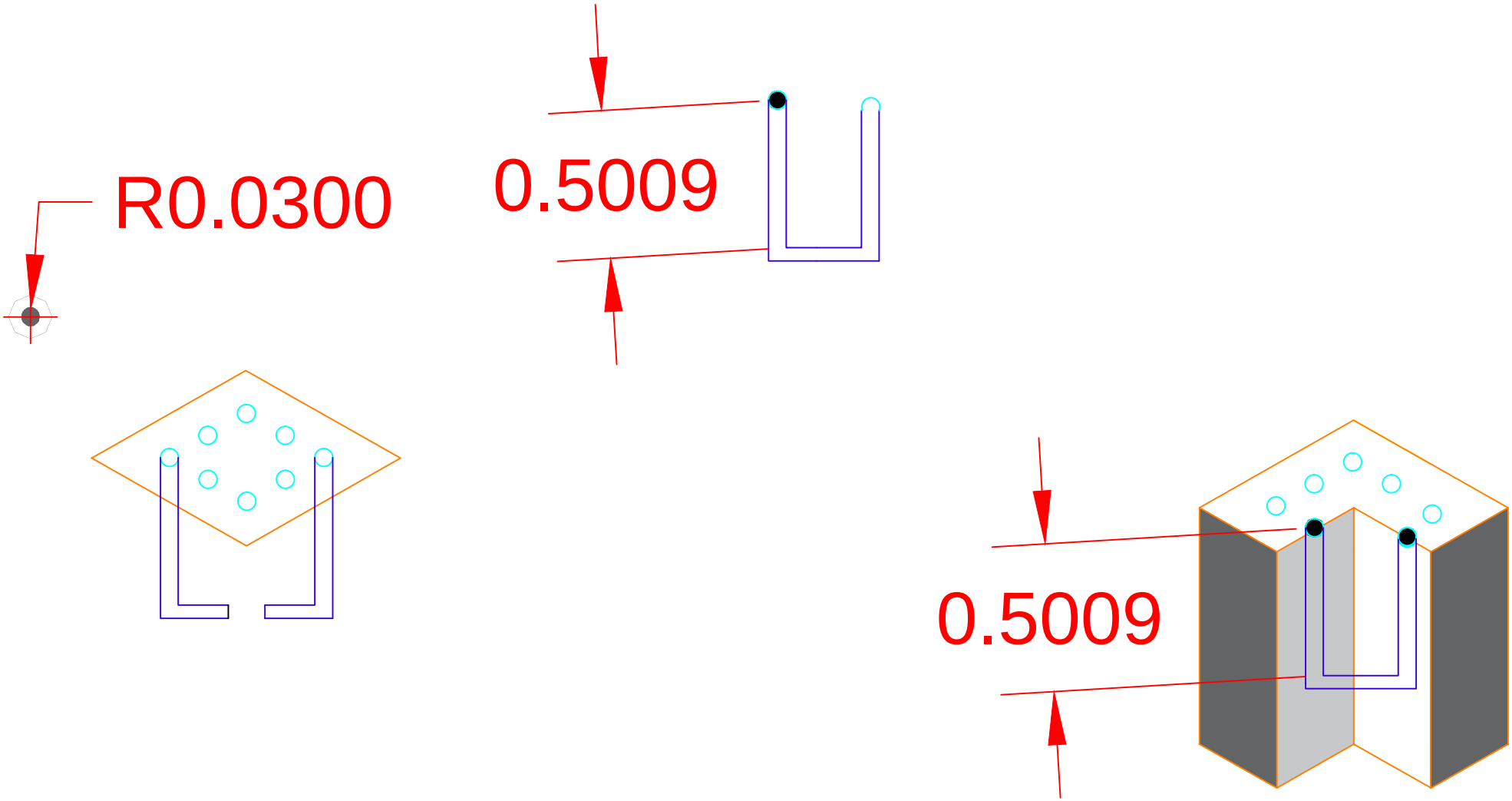
R0.0300
0.5009
0.5009

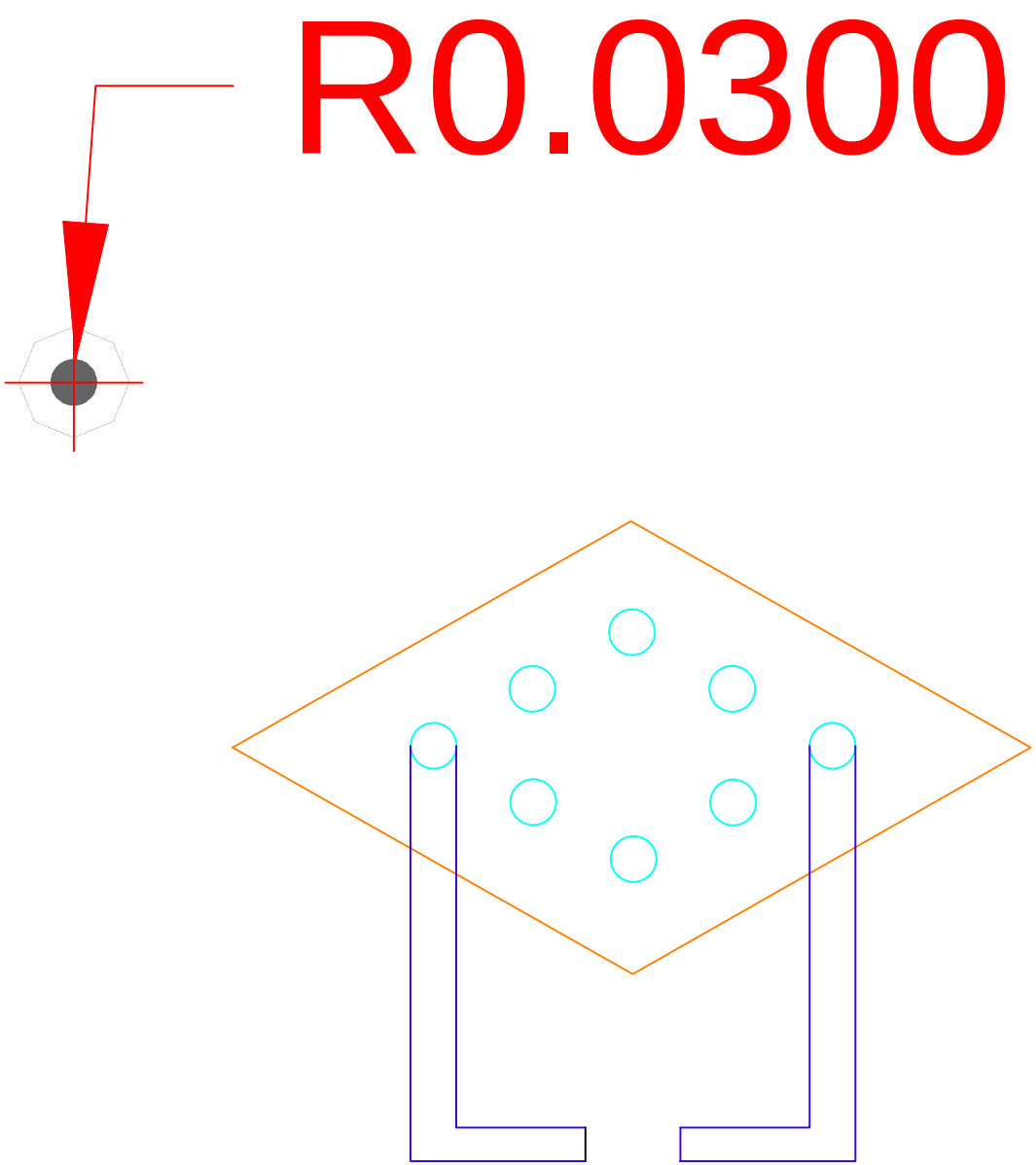
R0.0300

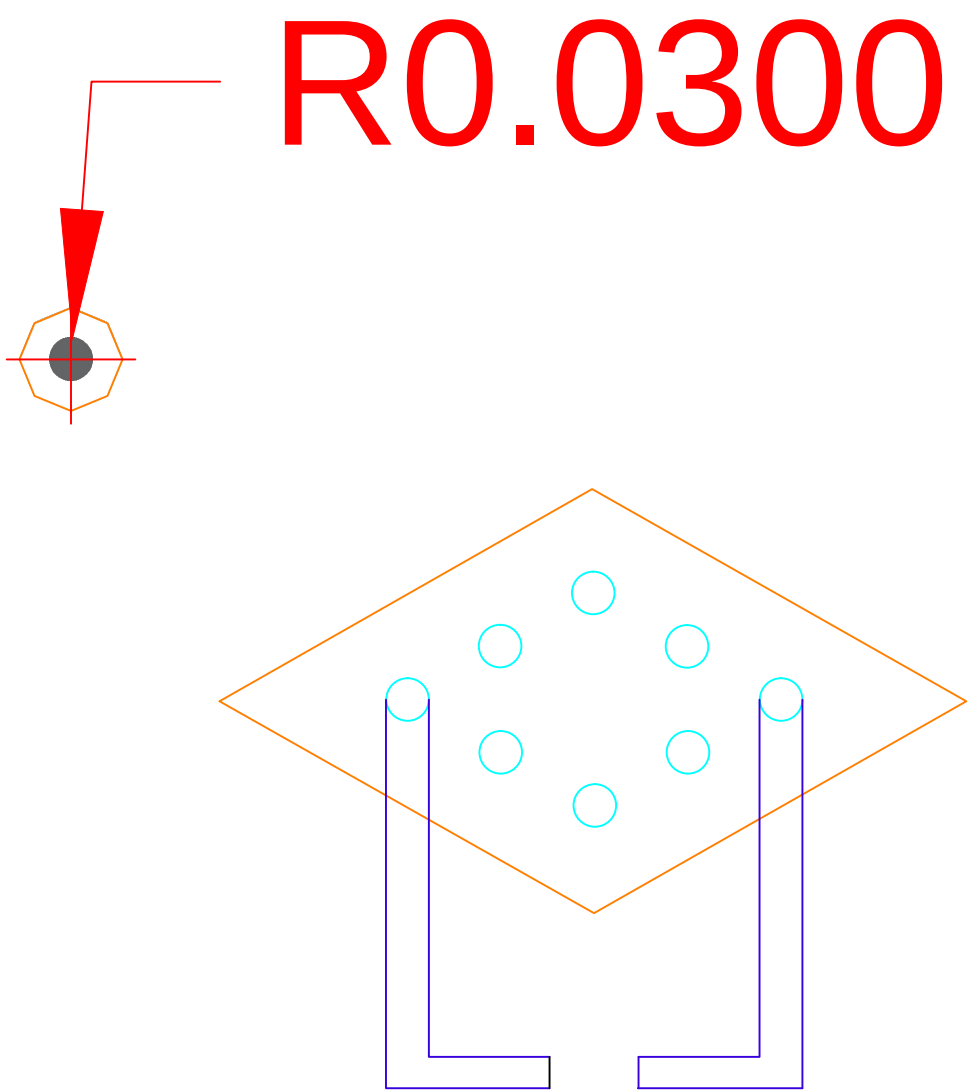
R0.0300

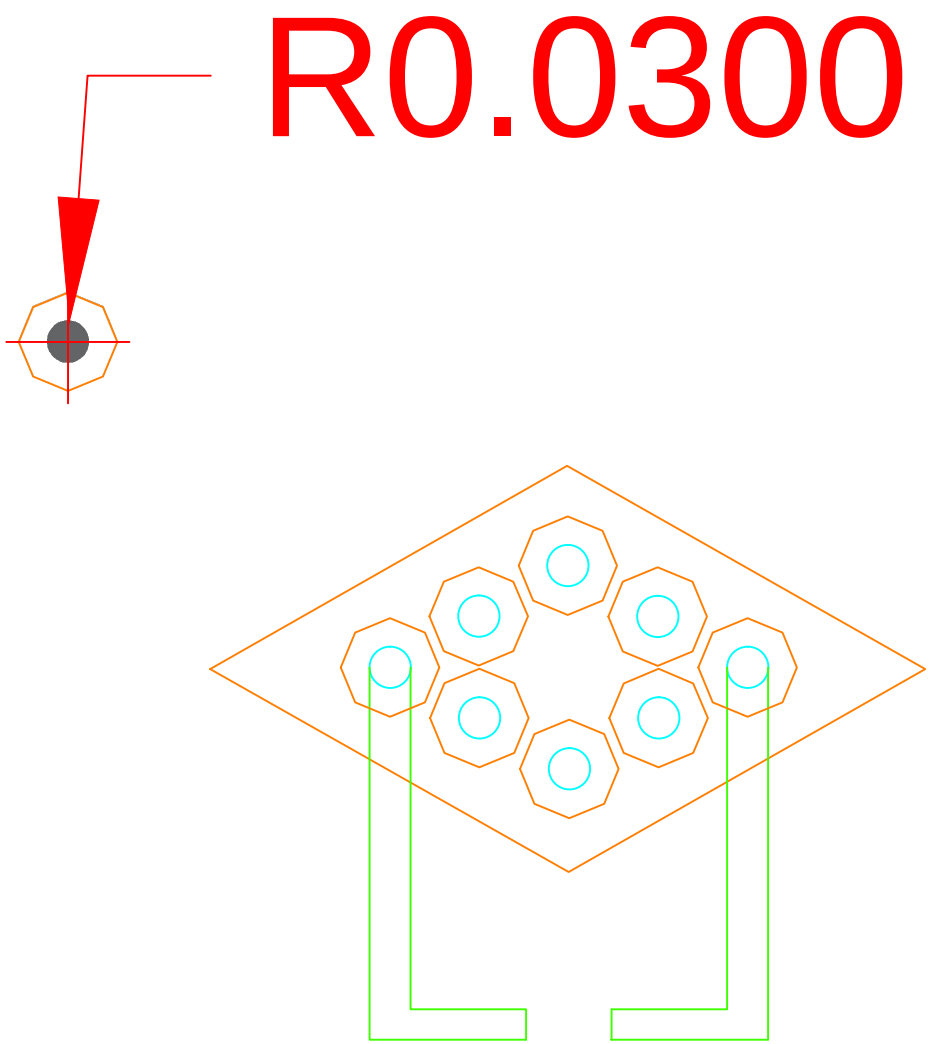
R0.0300

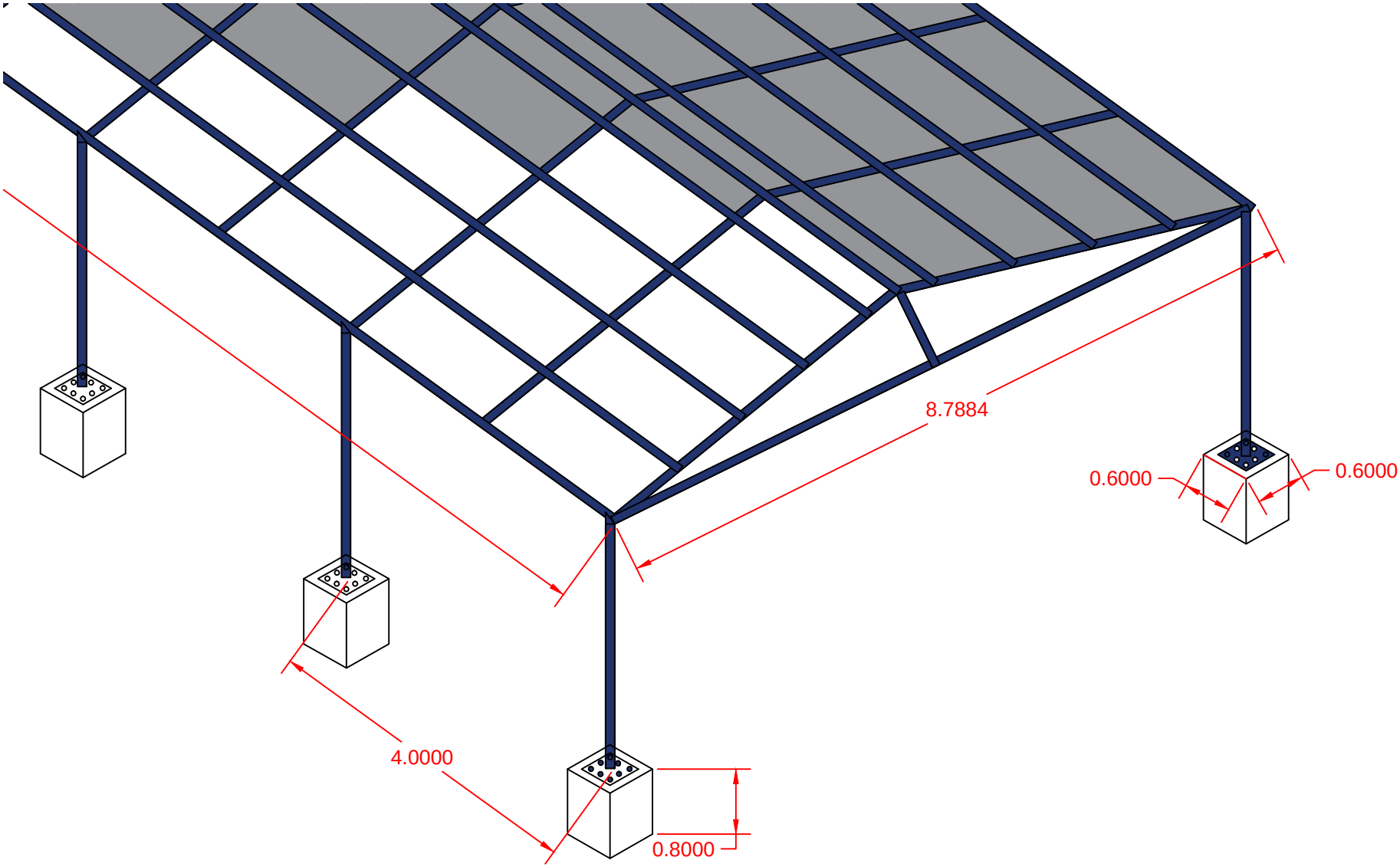
8.7884
0.6000
0.6000
4.0000
0.8000

U S EMBASSY SANA'A DTFS TENT PROJECT	
I Beam	180*90 MM
Metal Plate	6 MM
concrete foundation	600*600*800 MM
L bar	30 MM

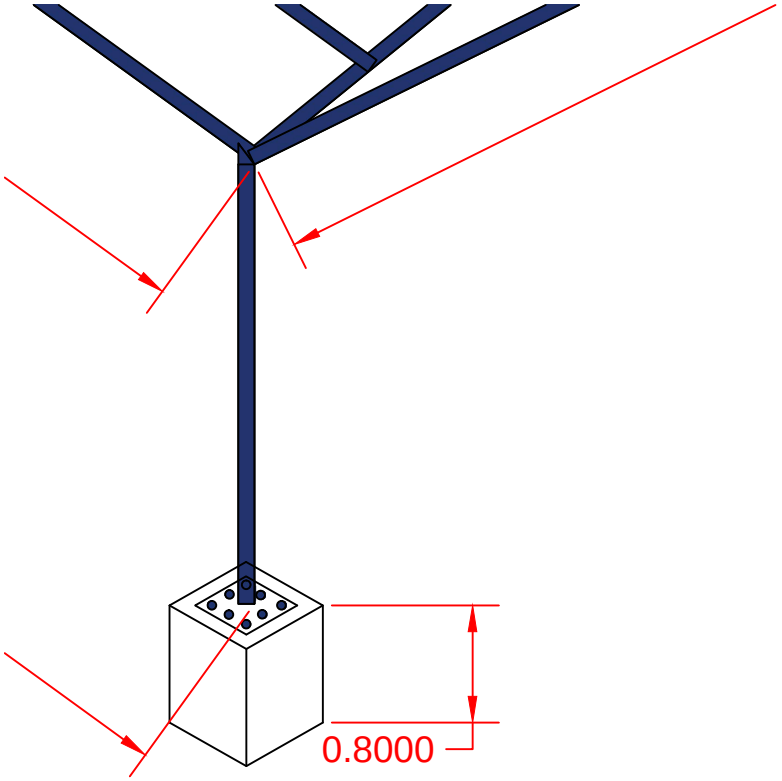
0.8000

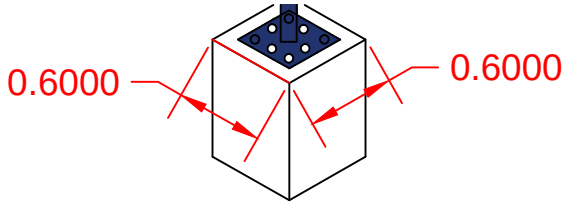
0.6000
0.6000

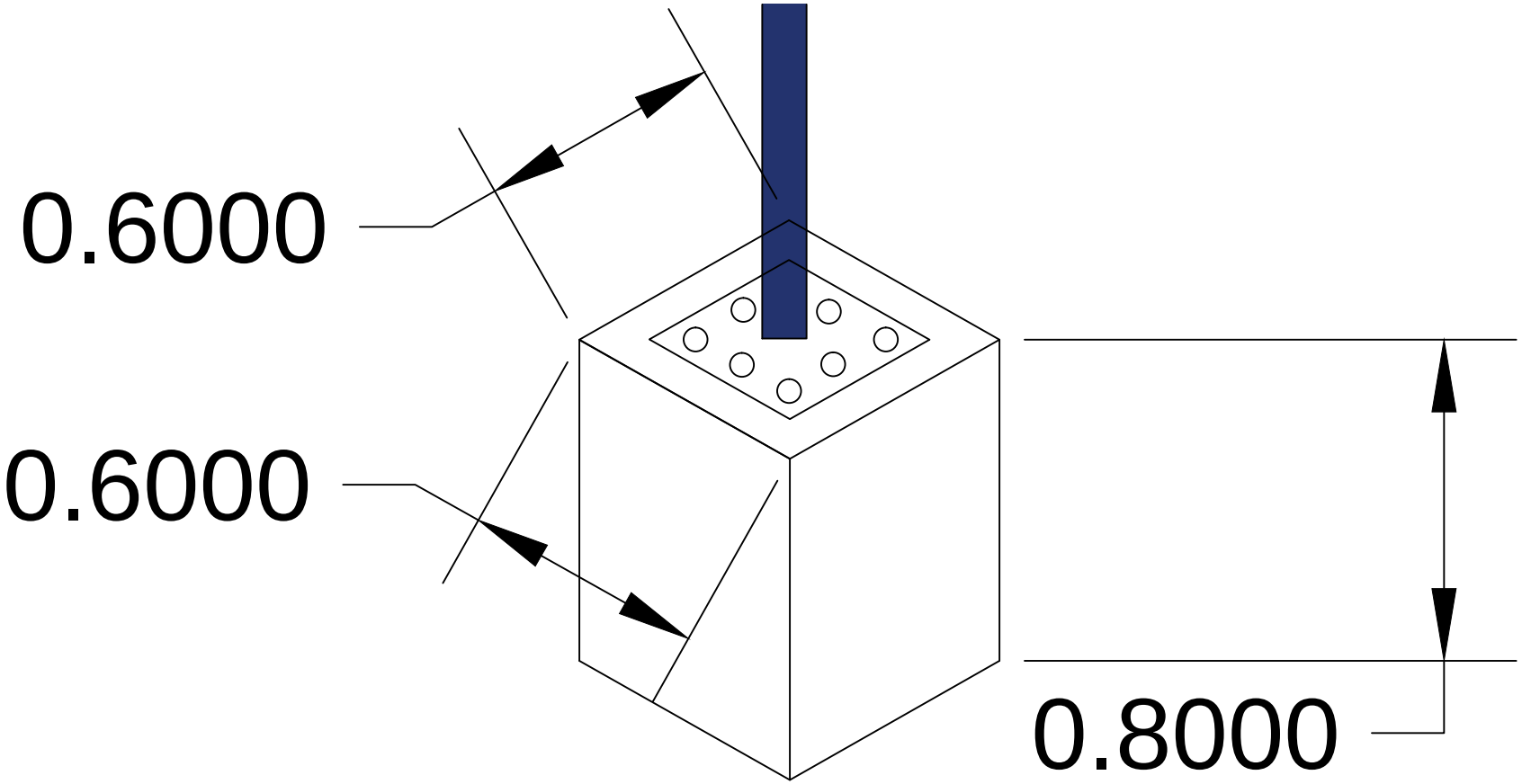
0.6000
0.6000
0.8000

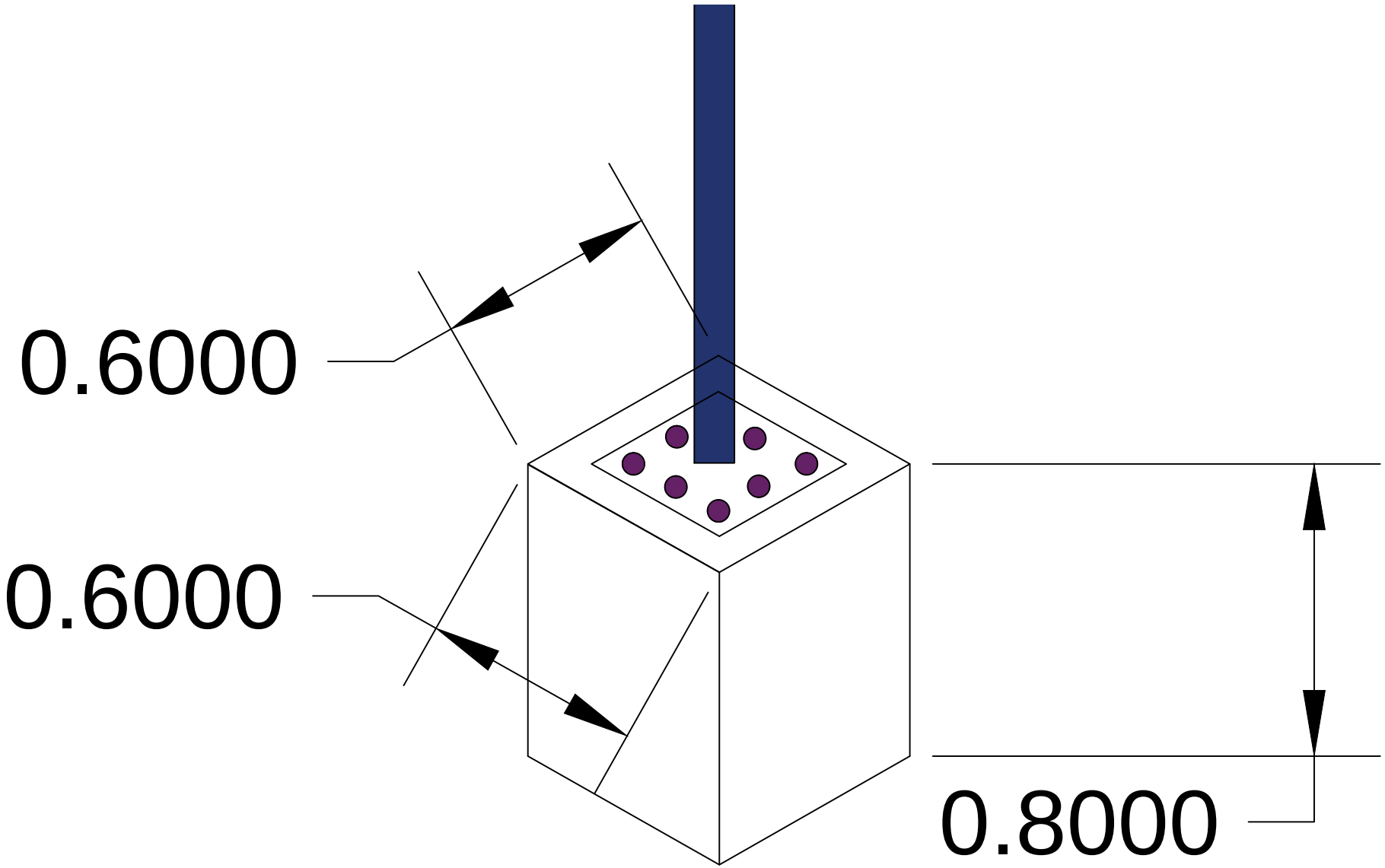
0.6000
0.6000
0.8000

concrete foundation

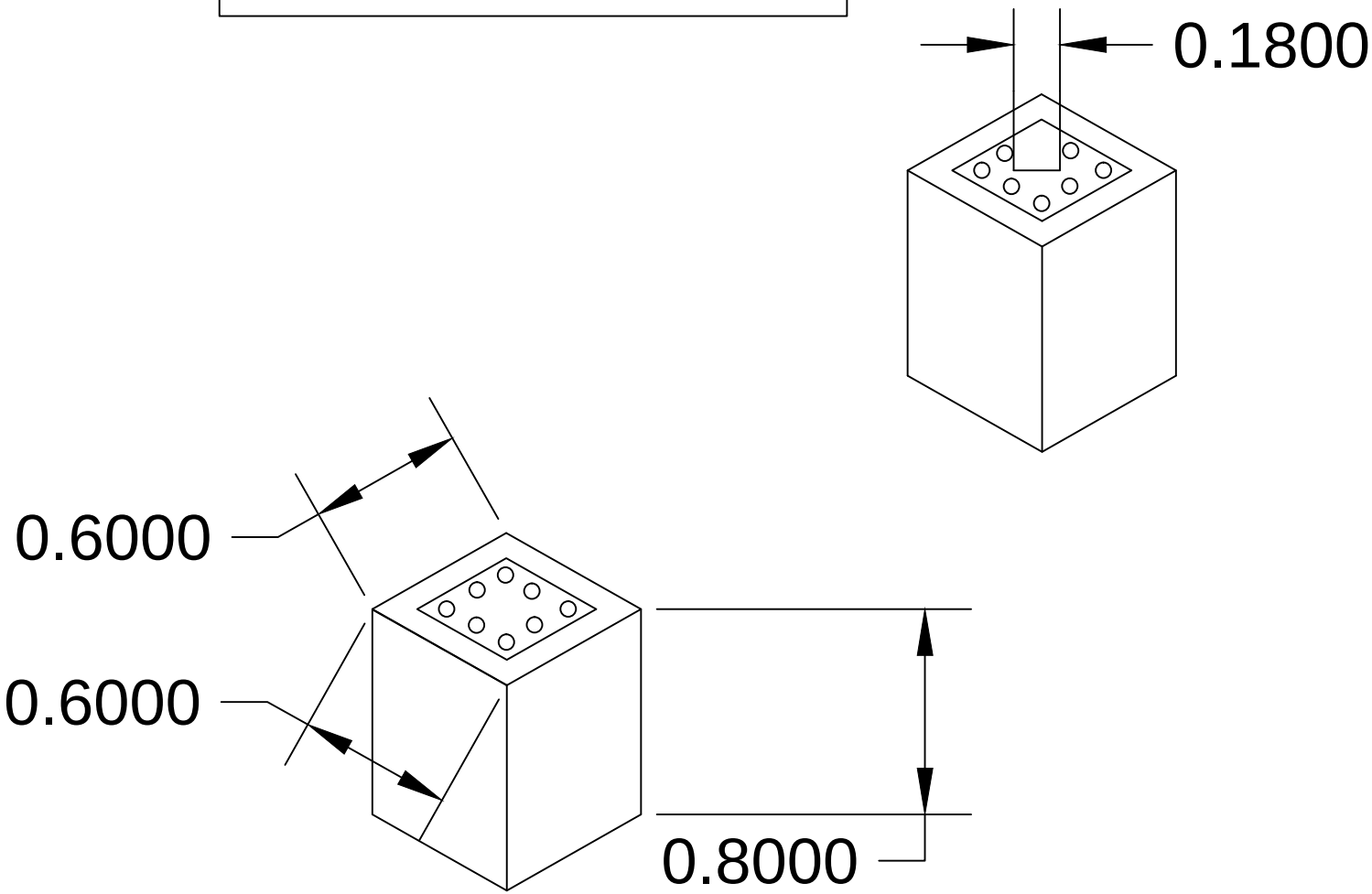

concrete foundation

I Beam

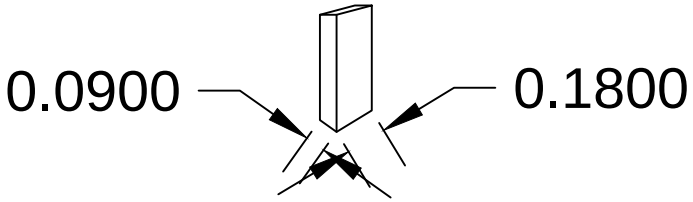

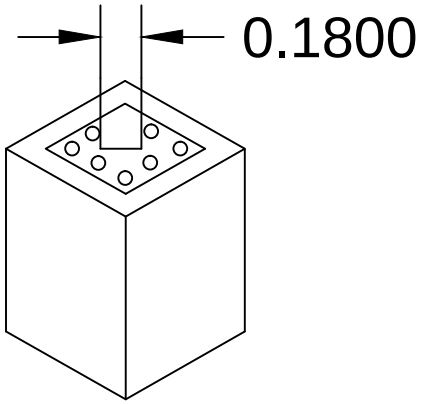

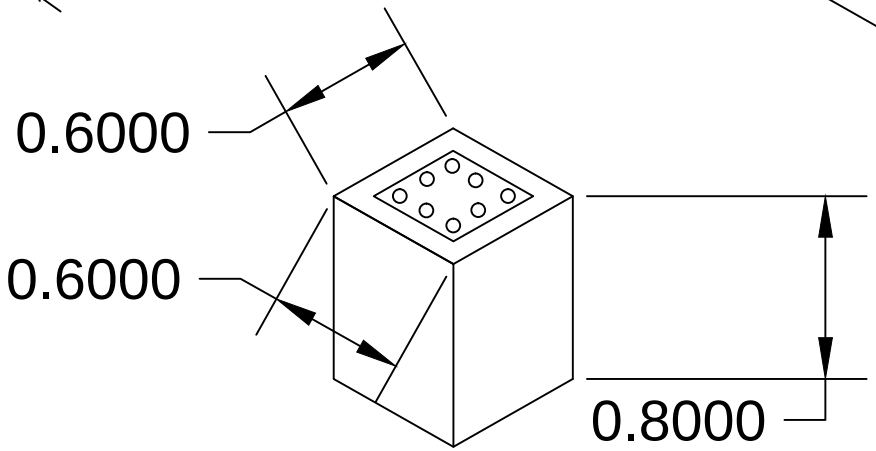

concrete foundation

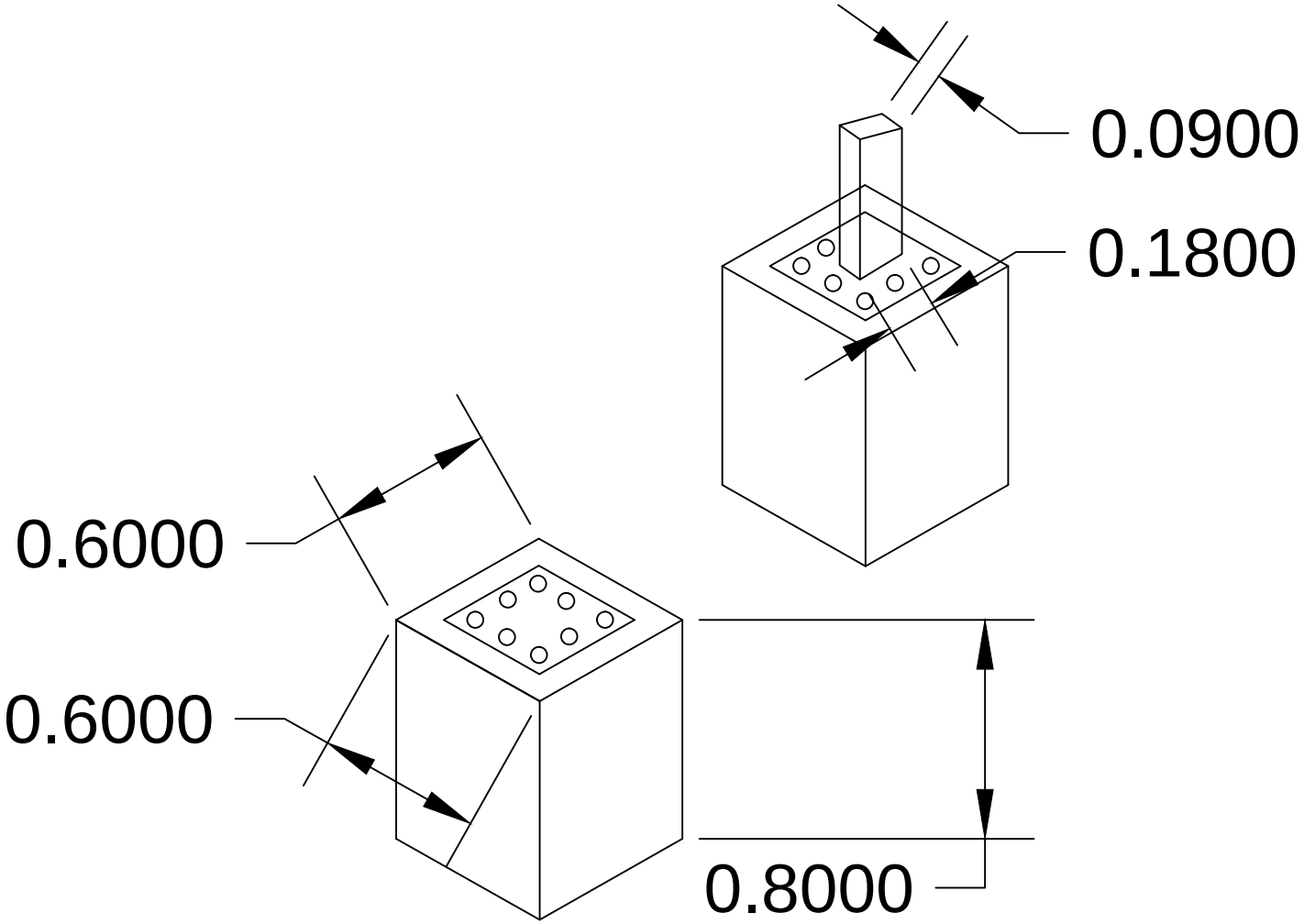

LIGHT Fixture

- 220 Volt
- 32 Watt
- 50 HZ