CONSULATE GENERAL OF THE
UNITED STATES OF AMERICA

Jeddah, Saudi Arabia

June 28, 2014

Dear Prospective Offeror:

SUBJECT: Solicitation Number SSA40014Q0005 to Construct, Fabricate and Install 6 Mobile Portable Guard Towers (MGTS2).

The Consulate of the United States of America invites you to submit a proposal for Construction, Fabrication and Installation of 6 Portable Guard Towers (MGTS2) at the US Consulate Compound at Palestine Street, Jeddah, Saudi Arabia.

Submit your proposal in a sealed envelope marked "Proposal Enclosed" to Mr. David H. Haskett on or before **July 17th 2014.** No proposal will be accepted after this time.

In order for a proposal to be considered, you must also complete and submit the following:

1. SF-18
2. Section B
3. Section I for attachments (SOW, Drawings and Bank Guaranty Letter)
4. Section K, Representations and Certifications;
5. Additional information as required in Section L.

Direct any questions regarding this solicitation to ***Fawad Muneer*** by letter or by telephone ***012-667-0080*** during regular business hours.

Sincerely,

David Haskett. H
Contracting Officer

REQUEST FOR QUOTATION *(THIS IS NOT AN ORDER)*	THIS RFQ _ IS x IS NOT A SMALL BUSINESS SET-ASIDE	Page 1 of 2

1. REQUEST NO.	2. DATE ISSUED	3. REQUISITION/PURCHASE REQUEST NO.	4. CERT. FOR NAT. DEF. UNDER BDSA REG. 2 AND/OR DMS REG. 1 ▶	RATING
SSA40014Q0005	06/27/2014	PR3414090		

5a. ISSUED BY
AMERICAN CONSULATE GENERAL JEDDAH
PALESTINE STREET, ATTN: GSO/PROCUREMENT
JEDDAH

6. DELIVER BY *(Date)*

5b. FOR INFORMATION CALL *(NO COLLECT CALLS)*

NAME	TELEPHONE NUMBER
Fawad Muneer	012-6670080 X 4257

7. DELIVERY
_ FOB DESTINATION x OTHER *(See Schedule)*

9. DESTINATION
a. NAME OF CONSIGNEE
AMERICAN CONSULATE GENERAL JEDDAH

8. TO:

a. NAME	b. COMPANY	b. STREET ADDRESS
N/A	NOVENDOR	PO BOX# 149, ATTN: GSO/PROCUREMENT

c. STREET ADDRESS	c. CITY
	JEDDAH

d. CITY	e. STATE	f. ZIP CODE	d. STATE	e. ZIP CODE
				21411

10. PLEASE FURNISH QUOTATIONS TO THE ISSUING OFFICE IN BLOCK 5A ON OR BEFORE CLOSE OF BUSINESS *(Date)*
07/16/2014

IMPORTANT: This is a request for information, and quotations furnished are not offers. If you are unable to quote, please so indicate on this form and return it to the address in Block 5A. This request does not commit the Government to pay any costs incurred in the preparation of the submission of this quotation or to contract for supplies or services. Supplies are of domestic origin unless otherwise indicated by quoter. Any representations and/or certifications attached to this Request for Quotations must be completed by the quoter.

11. SCHEDULE *(Include applicable Federal, State and local taxes)*

ITEM NO. (a)	SUPPLIES/SERVICES (b)	QUANTITY (c)	UNIT (d)	UNIT PRICE (e)	AMOUNT (f)
	SEE LINE ITEMS				

12. DISCOUNT FOR PROMPT PAYMENT ▶	a. 10 CALENDAR DAYS (%)	b. 20 CALENDAR DAYS (%)	c. 30 CALENDAR DAYS (%)	d. CALENDAR DAYS NUMBER	PERCENTAGE

NOTE: Additional provisions and representations [ ] are [ ] are not attached.

13. NAME AND ADDRESS OF QUOTER	14. SIGNATURE OF PERSON AUTHORIZED TO SIGN QUOTATION	15. DATE OF QUOTATION
a. NAME OF QUOTER		
STREET ADDRESS	16. SIGNER	
	a. NAME *(Type or print)* David H. Haskett	b. TELEPHONE AREA CODE 1VG 789 4273
c. COUNTY		
d. CITY / e. STATE / f. ZIP CODE	c. TITLE *(Type or print)* Jeddah GSO	NUMBER

CONSULATE GENERAL U.S. OF AMERICA JEDDAH, SAUDI ARABIA

AUTHORIZED FOR LOCAL REPRODUCTION
Previous edition not usable

STANDARD FORM 18 (REV. 6-95)
Prescribed by GSA - FAR (48 CFR) 53.215-1(a)

11. SCHEDULE *(Include applicable Federal, State and local taxes)*					
ITEM NO. (a)	SUPPLIES/SERVICES (b)	QUANTITY (c)	UNIT (d)	UNIT PRICE (e)	AMOUNT (f)
1	Construct, Fabricate and Install 6 Mobile Portable Guard Towers (MGTS2): This includes site preparation, shipping, erection cost, steel fabrication, concrete, Door (15FE/BR), window (15FE/BR), six power sources, security lights, cameras and Gun ports. Detailed Scope of work and drawings are attached in the section – I of the solicitation. This system goes up in 10hrs on 8" compacted gravel so little site work. Basic load to maintain AC, security lights, cameras, and electrical outlets. RSO and procurment have the complete drawings and SOW for the project. Once bids are recieved and solicitation is complete RSO Jeddah will request funds from DS and or OBO. Funding Information: Total: $0.00 ---------- $0.00	6.00	EA	$0.00	$0.00

TABLE OF CONTENTS

SF 18 or SF 1442 cover sheet

A. Price
B. Scope of Work
C. Packaging and Marking
D. Inspection and Acceptance
E. Deliveries/Performance
F. Administrative Data
G. Special Requirements
H. Clauses
I. List of Attachments
J. Quotation Information
K. Evaluation Criteria
L. Representations, Certifications, and other Statements of Offerors or Quoters

Attachments

Attachment 1: Sample Letter of Bank Guaranty
Attachment 2: Scope of work
Attachment 3: Drawings

REQUEST FOR QUOTATIONS - CONSTRUCTION

A. PRICE

The US Consulate General, Jeddah is soliciting bids to Construct, Fabricate and Install 6 Mobile Portable Guard Towers (MGTS2): This includes site preparation, shipping, erection cost, steel fabrication, concrete, Door (15FE/BR), window (15FE/BR), six power sources, security lights, cameras and Gun ports. Detailed Scope of work and drawings are attached in the section – I of the solicitation.

The Contractor shall complete all work, including furnishing all labor, material, equipment and services required under this purchase order for the following firm fixed price and within the time specified. This price shall include all labor, materials, all insurances, overhead and profit.

Total Price (including all labor, materials, overhead and profit)	

----------END OF THE PAGE----------

B. SCOPE OF WORK

Construct, Fabricate and Install 6 Mobile Portable Guard Towers (MGTS2): This includes site preparation, shipping, erection cost, steel fabrication, concrete, Door (15FE/BR), window (15FE/BR), six power sources, security lights, cameras and Gun ports. Detailed Scope of work and drawings are attached in the section – I of the solicitation.

In case of differences between small and large-scale drawings, the latter will govern. Where a portion of the work is drawn in detail and the remainder of the work is indicated in outline, the parts drawn in detail shall apply also to all other portions of the work.

----------END OF THE PAGE----------

C. PACKAGING AND MARKING

Mark materials delivered to the site as follows: N/A

D. INSPECTION AND ACCEPTANCE

The COR, or his/her authorized representatives, will inspect from time to time the services being performed and the supplies furnished to determine whether work is being performed in a satisfactory manner, and that all supplies are of acceptable quality and standards.

The Contractor shall be responsible for any countermeasures or corrective action, within the scope of this contract, which may be required by the Contracting Officer as a result of such inspection.

D.1 Substantial Completion

(a) "*Substantial Completion*" means the stage in the progress of the work as determined and certified by the Contracting Officer in writing to the Contractor, on which the work (or a portion designated by the Government) is sufficiently complete and satisfactory. Substantial completion means that the property may be occupied or used for the purpose for which it is intended, and only minor items such as touch-up, adjustments, and minor replacements or installations remain to be completed or corrected which:

(1) do not interfere with the intended occupancy or utilization of the work, and
(2) can be completed or corrected within the time period required for final completion.

(b) The "date of substantial completion" means the date determined by the Contracting Officer or authorized Government representative as of which substantial completion of the work has been achieved.

Use and Possession upon Substantial Completion - The Government shall have the right to take possession of and use the work upon substantial completion. Upon notice by the Contractor that the work is substantially complete (a Request for Substantial Completion) and an inspection by the Contracting Officer or an authorized Government representative (including any required tests), the Contracting Officer shall furnish the Contractor a Certificate of Substantial Completion. The certificate will be accompanied by a Schedule of Defects listing items of work remaining to be performed, completed or corrected before final completion and acceptance. Failure of the Contracting Officer to list any item of work shall not relieve the Contractor of responsibility for complying with the terms of the contract. The Government's possession or use upon substantial completion shall not be deemed an acceptance of any work under the contract.

D.2 Final Completion and Acceptance

D.2.1 "Final completion and acceptance" means the stage in the progress of the work as determined by the Contracting Officer and confirmed in writing to the Contractor, at which all work required under the contract has been completed in a satisfactory manner, subject to the discovery of defects after final completion, and except for items specifically excluded in the notice of final acceptance.

D.2.2 The "*date of final completion and acceptance*" means the date determined by the Contracting Officer when final completion of the work has been achieved, as indicated by written notice to the Contractor.

D.2.3 Final Inspection and Tests -The Contractor shall give the Contracting Officer at least five (5) days advance written notice of the date when the work will be fully completed and ready for final inspection and tests. Final inspection and tests will be started not later than the date specified in the notice unless the Contracting Officer determines that the work is not ready for final inspection and so informs the Contractor.

D.2.4 Final Acceptance - If the Contracting Officer is satisfied that the work under the contract is complete (with the exception of continuing obligations), the Contracting Officer shall issue to the Contractor a notice of final acceptance and make final payment upon:

- Satisfactory completion of all required tests,
- A final inspection that all items by the Contracting Officer listed in the Schedule of Defects have been completed or corrected and that the work is finally complete (subject to the discovery of defects after final completion), and
- Submittal by the Contractor of all documents and other items required upon completion of the work, including a final request for payment (Request for Final Acceptance).

----------END OF THE PAGE----------

E. DELIVERIES OR PERFORMANCE

52.211-10 COMMENCEMENT, PROSECUTION, AND COMPLETION OF WORK (APR 1984)

The Contractor shall be required to:

(a) commence work under this contract within 7 calendar days after the date the Contractor receives the notice to proceed,
(b) prosecute the work diligently, and,
(c) complete the entire work ready for use not later than 60 days after the Notice to proceed.

The time stated for completion shall include final cleanup of the premises and completion of punch list items.

52.211-12 LIQUIDATED DAMAGES - CONSTRUCTION (SEP 2000)

(a) If the Contractor fails to complete the work within the time specified in the contract, or any extension, the Contractor shall pay liquidated damages to the Government in the amount of **SAR 375.00** for each calendar day of delay until the work is completed or accepted.

(b) If the Government terminates the Contractor's right to proceed, liquidated damages will continue to accrue until the work is completed. These liquidated damages are in addition to excess costs of repurchase under the Default clause.

CONTRACTOR'S SUBMISSION OF CONSTRUCTION SCHEDULES

(a) The time for submission of the schedules referenced in FAR 52.236-15, "Schedules for Construction Contracts", paragraph (a), is hereby modified to reflect the due date for submission as " **10** calendar days after receipt of an executed contract".

(b) These schedules shall include the time by which shop drawings, product data, samples and other submittals required by the contract will be submitted for approval.

(c) The Contractor shall revise such schedules (1) to account for the actual progress of the work, (2) to reflect approved adjustments in the performance schedule, and (3) as required by the Contracting Officer to achieve coordination with work by the Government and any separate contractors used by the Government. The Contractor shall submit a schedule, which sequences work so as to minimize disruption at the job site.

(d) All deliverables shall be in the English language and any system of dimensions (English or metric) shown shall be consistent with that used in the contract. No extension of time shall be allowed due to delay by the Government in approving such deliverables if the Contractor has failed to act promptly and responsively in submitting its deliverables. The Contractor shall identify each deliverable as required by the contract.

(e) Acceptance of Schedule: When the Government has accepted any time schedule; it shall be binding upon the Contractor. The completion date is fixed and may be extended only by

a written contract modification signed by the Contracting Officer. Acceptance or approval of any schedule or revision thereof by the Government shall not:

(1) Extend the completion date or obligate the Government to do so,
(2) Constitute acceptance or approval of any delay, or
(3) Excuse the Contractor from or relieve the Contractor of its obligation to maintain the progress of the work and achieve final completion by the established completion date.

Notice Of Delay

If the Contractor receives a notice of any change in the work, or if any other conditions arise which are likely to cause or are actually causing delays which the Contractor believes may result in late completion of the project, the Contractor shall notify the Contracting Officer. The Contractor's notice shall state the effect, if any, of such change or other conditions upon the approved schedule, and shall state in what respects, if any, the relevant schedule or the completion date should be revised. The Contractor shall give such notice promptly, not more than ten (10) days after the first event giving rise to the delay or prospective delay. Only the Contracting Officer may make revisions to the approved time schedule.

Notice to Proceed

(a) After receiving and accepting any bonds or evidence of insurance, the Contracting Officer will provide the Contractor a Notice to Proceed. The Contractor must then prosecute the work, commencing and completing performance not later than the time period established in the contract.

(b) It is possible that the Contracting Officer may elect to issue the Notice to Proceed before receipt and acceptance of any bonds or evidence of insurance. Issuance of a Notice to Proceed by the Government before receipt of the required bonds or insurance certificates or policies shall not be a waiver of the requirement to furnish these documents.

Working Hours

All work shall be performed during **work week Sunday-Thursday from 0800-1700 Hrs**. Other hours, if requested by the Contractor, may be approved by the Contracting Officer's Representative (COR). The Contractor shall give 24 hours in advance to COR who will consider any deviation from the hours identified above. Changes in work hours, initiated by the Contractor, will not be a cause for a price increase.

Preconstruction Conference

N/A, TBD if Required.

Deliverables - The following items shall be delivered under this contract:			
Description	Quantity	Deliver Date	Deliver To
Section G. Securities/Insurance	1	10 days after award	CO
Section E. Construction Schedule	1	10 days after award	COR
Section E. Preconstruction Conference	1	10 days after award	COR
Section G. Personnel Biographies	1	10 days after award	COR
Section F. Payment Request	1	Last calendar day of each month	COR
Section D. Request for Substantial Completion	1	15 days before inspection	COR
Section D. Request for Final Acceptance	1	5 days before inspection	COR

----------END OF THE PAGE----------

F. ADMINISTRATIVE DATA

652.242-70 CONTRACTING OFFICER'S REPRESENTATIVE (COR) (AUG 1999)

(a) The Contracting Officer may designate in writing one or more Government employees, by name or position title, to take action for the Contracting Officer under this contract. Each designee shall be identified as a Contracting Officer's Representative (COR). Such designation(s) shall specify the scope and limitations of the authority so delegated; provided, that the designee shall not change the terms or conditions of the contract, unless the COR is a warranted Contracting Officer and this authority is delegated in the designation.

(b) The COR for this contract is **RSO.**

Payment: The Contractor's attention is directed to Section H, 52.232-5, "Payments Under Fixed-Price Construction Contracts". The following elaborates on the information contained in that clause.

Requests for payment, may be made no more frequently than monthly. Payment requests shall cover the value of labor and materials completed and in place, including a prorated portion of overhead and profit.

After receipt of the Contractor's request for payment, and on the basis of an inspection of the work, the Contracting Officer shall make a determination as to the amount, which is then due. If the Contracting Officer does not approve payment of the full amount applied for, less the retainage allowed by in 52.232-5, the Contracting Officer shall advise the Contractor as to the reasons.

Under the authority of 52.232-27(a), the 14 day period identified in FAR 52.232-27(a)(1)(i)(A) is hereby changed to 30 days.

The invoices should be sent to below office:

Management office
US Consulate, Jeddah
Palestine Street
Jeddah, Saudi Arabia

G. SPECIAL REQUIREMENTS

G.1.0 Performance/Payment Protection - The Contractor shall furnish some form of payment protection as described in 52.228-13 in the amount of 50% of the contract price.

G.1.1 The Contractor shall provide the information required by the paragraph above within ten (10) calendar days after award. Failure to timely submit the required security may result in rescinding or termination of the contract by the Government. If the contract is terminated, the Contractor will be liable for those costs as described in FAR 52.249-10, Default (Fixed-Price Construction), which is included in this purchase order.

G.1.2 The bonds or alternate performance security shall guarantee the Contractor's execution and completion of the work within the contract time. This security shall also guarantee the correction of any defects after completion, the payment of all wages and other amounts payable by the Contractor under its subcontracts or for labor and materials, and the satisfaction or removal of any liens or encumbrances placed on the work.

G.1.3 The required securities shall remain in effect in the full amount required until final acceptance of the project by the Government. Upon final acceptance, the penal sum of the performance security shall be reduced to 10% of the contract price. The security shall remain in effect for one year after the date of final completion and acceptance, and the Contractor shall pay any premium required for the entire period of coverage.

G.2.0 Insurance - The Contractor is required by FAR 52.228-5, "Insurance - Work on a Government Installation" to provide whatever insurance is legally necessary. The Contractor shall at its own expense provide and maintain during the entire performance period the following insurance amounts:

G.2.1 General Liability (includes premises/operations, collapse hazard, products, completed operations, contractual, independent contractors, broad form property damage, personal injury)

(1) Bodily Injury, On or Off the Site, in U.S. Dollars	
Per Occurrence	**USD 150000.00**
Cumulative	**USD 500,000.00**
(2) Property Damage, On or Off the Site, in U.S. Dollars	
Per Occurrence	**USD 150000.00**
Cumulative	**USD 500,000.00**

G.2.2 The foregoing types and amounts of insurance are the minimums required. The Contractor shall obtain any other types of insurance required by local law or that are ordinarily or customarily obtained in the location of the work. The limit of such insurance shall be as provided by law or sufficient to meet normal and customary claims.

G.2.3 The Contractor agrees that the Government shall not be responsible for personal injuries or for damages to any property of the Contractor, its officers, agents, servants, and employees, or any other person, arising from and incident to the Contractor's performance of this contract. The Contractor shall hold harmless and indemnify the Government from any and all claims arising therefrom, except in the instance of gross negligence on the part of the Government.

G.2.4 The Contractor shall obtain adequate insurance for damage to, or theft of, materials and equipment in insurance coverage for loose transit to the site or in storage on or off the site.

G.2.5 The general liability policy required of the Contractor shall name "the United States of America, acting by and through the Department of State", as an additional insured with respect to operations performed under this contract.

G.3.0 Document Descriptions

G.3.1 Supplemental Documents: The Contracting Officer shall furnish from time to time such detailed drawings and other information as is considered necessary, in the opinion of the Contracting Officer, to interpret, clarify, supplement, or correct inconsistencies, errors or omissions in the Contract documents, or to describe minor changes in the work not involving an increase in the contract price or extension of the contract time. The Contractor shall comply with the requirements of the supplemental documents, and unless prompt objection is made by the Contractor within 20 days, their issuance shall not provide for any claim for an increase in the Contract price or an extension of contract time.

G.3.1.1. Record Documents. The Contractor shall maintain at the project site:

(1) a current marked set of Contract drawings and specifications indicating all interpretations and clarification, contract modifications, change orders, or any other departure from the contract requirements approved by the Contracting Officer; and,
(2) a complete set of record shop drawings, product data, samples and other submittals as approved by the Contracting Officer.

G.3.1.2. "As-Built" Documents: After final completion of the work, but before final acceptance thereof, the Contractor shall provide:

(1) a complete set of "as-built" drawings, based upon the record set of drawings, marked to show the details of construction as actually accomplished; and,
(2) record shop drawings and other submittals, in the number and form as required by the specifications.

G.4.0 Laws and Regulations - The Contractor shall, without additional expense to the Government, be responsible for complying with all laws, codes, ordinances, and regulations applicable to the performance of the work, including those of the host country, and with the lawful orders of any governmental authority having jurisdiction. Host country authorities may not enter the construction site without the permission of the Contracting Officer. Unless otherwise directed by the Contracting Officer, the Contractor shall comply with the more

stringent of the requirements of such laws, regulations and orders and of the contract. In the event of a conflict between the contract and such laws, regulations and orders, the Contractor shall promptly advise the Contracting Officer of the conflict and of the Contractor's proposed course of action for resolution by the Contracting Officer.

G.4.1 The Contractor shall comply with all local labor laws, regulations, customs and practices pertaining to labor, safety, and similar matters, to the extent that such compliance is not inconsistent with the requirements of this contract.

G.4.2 The Contractor shall give written assurance to the Contracting Officer that all subcontractors and others performing work on or for the project have obtained all requisite licenses and permits.

G.4.3 The Contractor shall submit proper documentation and evidence satisfactory to the Contracting Officer of compliance with this clause.

G.5.0 Construction Personnel - The Contractor shall maintain discipline at the site and at all times take all reasonable precautions to prevent any unlawful, riotous, or disorderly conduct by or among those employed at the site. The Contractor shall ensure the preservation of peace and protection of persons and property in the neighborhood of the project against such action. The Contracting Officer may require, in writing that the Contractor remove from the work any employee that the Contracting Officer deems incompetent, careless, insubordinate or otherwise objectionable, or whose continued employment on the project is deemed by the Contracting Officer to be contrary to the Government's interests.

G.5.1 If the Contractor has knowledge that any actual or potential labor dispute is delaying or threatens to delay the timely performance of this contract, the Contractor shall immediately give notice, including all relevant information, to the Contracting Officer.

G.5.2 After award, the Contractor has ten calendar days to submit to the Contracting Officer a list of workers and supervisors assigned to this project for the Government to conduct all necessary security checks. It is anticipated that security checks will take _5____ days to perform. For each individual the list shall include:

Full Name
Place and Date of Birth
Current Address
Identification number (Iqama)
Vehicle Details

Failure to provide any of the above information may be considered grounds for rejection and/or resubmittal of the application. Once the Government has completed the security screening and approved the applicants a badge will be provided to the individual for access to the site. This badge may be revoked at any time due to the falsification of data, or misconduct on site.

G.5.3 The Contractor shall provide an English speaking supervisor on site at all times. This position is considered as key personnel under this purchase order.

G.6.0 Materials and Equipment - All materials and equipment incorporated into the work shall be new and for the purpose intended, unless otherwise specified. All workmanship shall be of good quality and performed in a skillful manner that will withstand inspection by the Contracting Officer.

G.7.0 Special Warranties

G.7.1 Any special warranties that may be required under the contract shall be subject to the stipulations set forth in 52.246-21, "Warranty of Construction", as long as they are not in conflict.

G.7.2 The Contractor shall obtain and furnish to the Government all information required to make any subcontractor's, manufacturer's, or supplier's guarantee or warranty legally binding and effective. The Contractor shall submit both the information and the guarantee or warranty to the Government in sufficient time to permit the Government to meet any time limit specified in the guarantee or warranty, but not later than completion and acceptance of all work under this contract.

G.8.0 Equitable Adjustments

Any circumstance for which the contract provides an equitable adjustment that causes a change within the meaning of paragraph (a) of the "Changes" clause shall be treated as a change under that clause; provided, that the Contractor gives the Contracting Officer prompt written notice (within 20 days) stating:

(a) the date, circumstances, and applicable contract clause authorizing an equitable adjustment and
(b) that the Contractor regards the event as a changed condition for which an equitable adjustment is allowed under the contract

The Contractor shall provide written notice of a differing site condition within 10 calendar days of occurrence following FAR 52.236-2, Differing Site Conditions.

G.9.0 Zoning Approvals and Permits

The Government shall be responsible for:

- obtaining proper zoning or other land use control approval for the project
- obtaining the approval of the Contracting Drawings and Specifications
- paying fees due for the foregoing; and,
- for obtaining and paying for the initial building permits.

H. CLAUSES

This contract incorporates one or more clauses by reference, with the same force and effect as if they were given in full text. Upon request, the Contracting Officer will make their full text available. Also, the full text of a clause may be accessed electronically at this/these address(es): *http://www.acquisition.gov/far/* or *http://farsite.hill.af.mil/vffara.htm*. Please note these addresses are subject to change.

If the Federal Acquisition Regulation (FAR) is not available at the locations indicated above, use the Department of State Acquisition website at *http://www.statebuy.state.gov/* to access links to the FAR. You may also use an internet "search engine" (for example, Google, Yahoo, Excite) to obtain the latest location of the most current FAR.

The following Federal Acquisition Regulation clause(s) is/are incorporated by reference (48 CFR CH. 1):

CLAUSE	TITLE AND DATE
52.202-1	DEFINITIONS (NOV 2013)
52.204-9	PERSONAL VERIFICATION OF CONTRACTOR PERSONNEL (JAN 2011)
52.204-10	REPORTING EXECUTIVE COMPENSATION AND FIRST-TIER SUBCONTRACT AWARDS (JUL 2013)
52.204-12	DATA UNIVERSAL NUMBERING SYSTEM NUMBER MAINTENANCE (DEC 2012)
52.204-13	SYSTEM FOR AWARD MANAGEMENT MAINTENANCE (JUL 2013)
52.209-6	PROTECTING THE GOVERNMENT'S INTEREST WHEN SUBCONTRACTING WITH CONTRACTORS DEBARRED, SUSPENDED OR PROPOSED FOR DEBARMENT (AUG 2013)
52.209-9	UPDATES OF INFORMATION REGARDING RESPONSIBILITY MATTERS (JUL 2013)
52.213-4	TERMS AND CONDITIONS –SIMPLIFIED ACQUISITIONS (OTHER THAN COMMERCIAL ITEMS) (JAN 2014)
52.216-7	ALLOWABLE COST AND PAYMENT (JUNE 2013)
52.222-1	NOTICE TO THE GOVERNMENT OF LABOR DISPUTES (FEB 1997)

52.222-19	CHILD LABOR – COOPERATION WITH AUTHORITIES AND REMEDIES (JAN 2014)
52.222-27	PROMPT PAYMENT CONSTRUCTION (JUL 2013)
52.222-50	COMBATING TRAFFICKING IN PERSONS (FEB 2009)
52.223-18	ENCOURAGING CONTRACTOR POLICIES TO BAN TEXT MESSAGING WHILE DRIVING (AUG 2011)
52.225-13	RESTRICTIONS ON CERTAIN FOREIGN PURCHASES (JUNE 2008)
52.225-14	INCONSISTENCY BETWEEN ENGLISH VERSION AND TRANSLATION OF CONTRACT (FEB 2000)
52.225-19	CONTRACTOR PERSONNEL IN A DESIGNATED OPERATIONAL AREA OR SUPPORTING A DIPLOMATIC MISSION OUTSIDE THE UNITED STATES (MAR 2008)
52.228-4	WORKERS' COMPENSATION AND WAR-HAZARD INSURANCE OVERSEAS (APR 1984)
52.228-5	INSURANCE - WORK ON A GOVERNMENT INSTALLATION (JAN 1997)
52.228-11	PLEDGES OF ASSETS (JAN 2012)
52.228-13	ALTERNATIVE PAYMENT PROTECTION (JUL 2000)
52.229-6	TAXES - FOREIGN FIXED-PRICE CONTRACTS (FEB 2013)
52.229-7	TAXES- FIXED PRICE CONTRACTS WITH FOREIGN GOVERNMENTS (FEB 2013)
52.232-5	PAYMENTS UNDER FIXED-PRICE CONSTRUCTION CONTRACTS (SEP 2002)
52.232-8	DISCOUNTS FOR PROMPT PAYMENT (FEB 2002)
52.232-11	EXTRAS (APR 1984)
52.232-18	AVAILABILITY OF FUNDS (APR 1984)
52.232-22	LIMITATION OF FUNDS (APR 1984)
52.232-24	PROHIBITION OF ASSIGNMENT OF CLAIMS (JAN 1986)

52.232-25 PROMPT PAYMENT (JUL 2013)

52.232-27 PROMPT PAYMENT FOR CONSTRUCTION CONTRACTS (JUL 2013)

52.232-33 PAYMENT BY ELECTRONIC FUNDS TRANSFER - SYSTEM FOR AWARD MANAGEMENT (JUL 2013)

52.232-34 PAYMENT BY ELECTRONIC FUNDS TRANSFER – OTHER THAN SYSTEM FOR AWARD MANAGEMENT (JUL 2013)

52.233-1 DISPUTES (JULY 2002) *Alternate I (DEC 1991)*

52.233-3 PROTEST AFTER AWARD (AUG 1996)

52.236-2 DIFFERING SITE CONDITIONS (APR 1984)

52.236-3 SITE INVESTIGATION AND CONDITIONS AFFECTING THE WORK (APR 1984)

52.236-5 MATERIAL AND WORKMANSHIP (APR 1984)

52.236-6 SUPERINTENDENCE BY THE CONTRACTOR (APR 1984)

52.236-7 PERMITS AND RESPONSIBILITIES (NOV 1991)

52.236-8 OTHER CONTRACTS (APR 1984)

52.236-9 PROTECTION OF EXISTING VEGETATION, STRUCTURES, EQUIPMENT, UTILITIES, AND IMPROVEMENTS (APR 1984)

52.236-10 OPERATIONS AND STORAGE AREAS (APR 1984)

52.236-11 USE AND POSSESSION PRIOR TO COMPLETION (APR 1984)

52.236-12 CLEANING UP (APR 1984)

52.236-14 AVAILABILITY AND USE OF UTILITY SERVICES (APR 1984)

52.236-15 SCHEDULES FOR CONSTRUCTION CONTRACTS (APR 1984)

52.236-21 SPECIFICATIONS AND DRAWINGS FOR CONSTRUCTION (FEB 1997)

52.236-26 PRECONSTRUCTION CONFERENCE (FEB 1995)

52.242-14 SUSPENSION OF WORK (APR 1984)

52.243-4 CHANGES (JUNE 2007)

52.243-5 CHANGES AND CHANGED CONDITIONS (APR 1984)

52.244-6 SUBCONTRACTS FOR COMMERCIAL ITEMS (DEC 2013)

52.245-2 GOVERNMENT PROPERTY INSTALLATION OPERATION SERVICES (APR 2012)

52.245-9 USE AND CHARGES (APR 2012)

52.246-12 INSPECTION OF CONSTRUCTION (AUG 1996)

52.246-17 WARRANTY OF SUPPLIES OF A NONCOMPLEX NATURE (JUNE 2003)

52.246-21 WARRANTY OF CONSTRUCTION (MAR 1994)

52.249-2 TERMINATION FOR CONVENIENCE OF THE GOVERNMENT (FIXED-PRICE) (APR 2012) *Alternate I (SEP 1996)*

52.249-10 DEFAULT (FIXED-PRICE CONSTRUCTION) (APR 1984)

52.249-14 EXCUSABLE DELAYS (APR 1984)

The following Department of State Acquisition Regulation (DOSAR) clause(s) is/are set forth in full text:

CONTRACTOR IDENTIFICATION (JULY 2008)

Contract performance may require contractor personnel to attend meetings with government personnel and the public, work within government offices, and/or utilize government email.

Contractor personnel must take the following actions to identify themselves as non-federal employees:

1) Use an e-mail signature block that shows name, the office being supported and company affiliation (e.g. “John Smith, Office of Human Resources, ACME Corporation Support Contractor”);
2) Clearly identify themselves and their contractor affiliation in meetings;
3) Identify their contractor affiliation in Departmental e-mail and phone listings whenever contractor personnel are included in those listings; and
4) Contractor personnel may not utilize Department of State logos or indicia on business cards.

(End of clause)

652.236-70 ACCIDENT PREVENTION (APR 2004)

(a) *General*. The Contractor shall provide and maintain work environments and procedures which will safeguard the public and Government personnel, property, materials, supplies, and equipment exposed to contractor operations and activities; avoid interruptions of Government operations and delays in project completion dates; and, control costs in the performance of this contract. For these purposes, the Contractor shall:

(1) Provide appropriate safety barricades, signs and signal lights;

(2) Comply with the standards issued by any local government authority having jurisdiction over occupational health and safety issues; and,

(3) Ensure that any additional measures the Contracting Officer determines to be reasonably necessary for this purpose are taken.

(4) For overseas construction projects, the Contracting Officer shall specify in writing additional requirements regarding safety if the work involves:

(i) Scaffolding;

(ii) Work at heights above two (2) meters;

(iii) Trenching or other excavation greater than one (1) meter in depth;

(iv) Earth moving equipment;

(v) Temporary wiring, use of portable electric tools, or other recognized electrical hazards. Temporary wiring and portable electric tools require the use of a ground fault circuit interrupter (GFCI) in the affected circuits; other electrical hazards may also require the use of a GFCI;

(vi) Work in confined spaces (limited exits, potential for oxygen less that 19.5 percent or combustible atmosphere, potential for solid or liquid engulfment, or other hazards considered to be immediately dangerous to life or health such as water tanks, transformer vaults, sewers, cisterns, etc.);

(vii) Hazardous materials – a material with a physical or health hazard including but not limited to, flammable, explosive, corrosive, toxic, reactive or unstable, or any operations which creates any kind of contamination inside an occupied building such as dust from demolition activities, paints, solvents, etc.; or

(viii) Hazardous noise levels.

(b) *Records*. The Contractor shall maintain an accurate record of exposure data on all accidents incident to work performed under this contract resulting in death, traumatic injury, occupational disease, or damage to or theft of property, materials, supplies, or equipment. The Contractor shall report this data in the manner prescribed by the Contracting Officer.

(c) *Subcontracts*. The Contractor shall be responsible for its subcontractors' compliance with this clause.

(d) *Written program.* Before commencing work, the Contractor shall:

(1) Submit a written plan to the Contracting Officer for implementing this clause. The plan shall include specific management or technical procedures for effectively controlling hazards associated with the project; and,

(2) Meet with the Contracting Officer to discuss and develop a mutual understanding relative to administration of the overall safety program.

(e) *Notification*. The Contracting Officer shall notify the Contractor of any non-compliance with these requirements and the corrective actions required. This notice, when delivered to the Contractor or the Contractor's representative on site, shall be deemed sufficient notice of the non-compliance and corrective action required. After receiving the notice, the Contractor shall immediately take corrective action. If the Contractor fails or refuses to promptly take corrective action, the Contracting Officer may issue an order suspending all or part of the work until satisfactory corrective action has been taken. The Contractor shall not be entitled to any equitable adjustment of the contract price or extension of the performance schedule on any suspension of work order issued under this clause.

(End of clause)

652.242-73 AUTHORIZATION AND PERFORMANCE (AUG 1999)

(a) The Contractor warrants the following:

(1) That is has obtained authorization to operate and do business in the country or countries in which this contract will be performed;

(2) That is has obtained all necessary licenses and permits required to perform this contract; and,

(3) That it shall comply fully with all laws, decrees, labor standards, and regulations of said country or countries during the performance of this contract.

(b) If the party actually performing the work will be a subcontractor or joint venture partner, then such subcontractor or joint venture partner agrees to the requirements of paragraph (a) of this clause.

652.243-70 NOTICES (AUG 1999)

Any notice or request relating to this contract given by either party to the other shall be in writing. Said notice or request shall be mailed or delivered by hand to the other party at the address provided in the schedule of the contract. All modifications to the contract must be made in writing by the Contracting Officer.

652.229-71 PERSONAL PROPERTY DISPOSITION AT POSTS ABROAD (AUG 1999)

Regulations at 22 CFR Part 136 require that U.S. Government employees and their families do not profit personally from sales or other transactions with persons who are not themselves entitled to exemption from import restrictions, duties, or taxes. Should the Contractor experience importation or tax privileges in a foreign country because of its contractual relationship to the United States Government, the Contractor shall observe the requirements of 22 CFR Part 136 and all policies, rules, and procedures issued by the chief of mission in that foreign country.

I. LIST OF ATTACHMENTS

ATTACHMENT NUMBER	DESCRIPTION OF ATTACHMENT	NUMBER OF PAGES
Attachment 1	Sample Bank Letter of Guaranty	1
Attachment 2	Scope of Work	5
Attachment 3	Drawings	42

----------END OF THE PAGE----------

J. QUOTATION INFORMATION

A. QUALIFICATIONS OF OFFERORS

Offerors/quoters must be technically qualified and financially responsible to perform the work described in this solicitation. At a minimum, each Offeror/Quoter must meet the following requirements:

(1) Be able to understand written and spoken English;
(2) Have an established business with a permanent address and telephone listing;
(3) Be able to demonstrate prior construction experience with suitable references;
(4) Have the necessary personnel, equipment and financial resources available to perform the work;
(5) Have all licenses and permits required by local law;
(6) Meet all local insurance requirements;
(7) Have the ability to obtain or to post adequate performance security, such as bonds, irrevocable letters of credit or guarantees issued by a reputable financial institution;
(8) Have no adverse criminal record; and
(9) Have no political or business affiliation which could be considered contrary to the interests of the United States.

B. SUBMISSION OF QUOTATIONS

This solicitation is for the performance of the construction services described in SCOPE OF WORK, and the Attachments which are a part of this request for quotation.

Each quotation must consist of the following:		
Volume	Title	Number of Copies*
I	Standard Form 18 including a completed Attachment 4, "BREAKDOWN OF PROPOSAL PRICE BY DIVISIONS OF SPECIFICATIONS	1
II	Performance schedule in the form of a "bar chart" and Business Management/Technical Proposal	1

Submit the complete quotation to the address indicated. If mailed, on Standard Form 18, or if hand-delivered, use the address set forth below.

US Consulate General, Jeddah
Hamra Dist, Hail Street Gate
Jeddah, Saudi Arabia

The Offeror/Quoter shall identify and explain/justify any deviations, exceptions, or conditional assumptions taken with respect to any of the instructions or requirements of this request for quotation in the appropriate volume of the offer.

Volume II: Performance schedule and Business Management/Technical Proposal.

(a) Present the performance schedule in the form of a "bar chart" indicating when the various portions of the work will be commenced and completed within the required schedule. This bar chart shall be in sufficient detail to clearly show each segregable portion of work and its planned commencement and completion date.

(b) The Business Management/Technical Proposal shall be in two parts, including the following information:

Proposed Work Information - Provide the following:

(1) A list of the names, addresses and telephone numbers of the owners, partners, and principal officers of the Offeror;

(2) The name and address of the Offeror's field superintendent for this project;

(3) A list of the names, addresses, and telephone numbers of subcontractors and principal materials suppliers to be used on the project, indicating what portions of the work will be performed by them; and,

Experience and Past Performance - List all contracts and subcontracts your company has held over the past three years for the same or similar work. Provide the following information for each contract and subcontract:

(1) Customer's name, address, and telephone numbers of customer's lead contract and technical personnel;

(2) Contract number and type;

(3) Date of the contract award place(s) of performance, and completion dates; Contract dollar value;

(4) Brief description of the work, including responsibilities; and

(5) Any litigation currently in process or occurring within last 5 years.

C. 52.236-27 SITE VISIT (CONSTRUCTION) (FEB 1995)

N/A

D. MAGNITUDE OF CONSTRUCTION PROJECT – N/A

E. LATE QUOTATIONS. Late quotations shall be handled in accordance with FAR.

F. 52.252-1 SOLICITATION PROVISIONS INCORPORATED BY REFERENCE (FEB 1998)

This contract incorporates the following provisions by reference, with the same force and effect as if they were given in full text. Upon request, the Contracting Officer will make their full text available. The offeror is cautioned that the listed provisions may include blocks that must be completed by the offeror and submitted with its quotation or offer. In lieu of submitting the full text of those provisions, the offeror may identify the provision by paragraph identifier and provide the appropriate information with its quotation or offer. Also, the full text of a solicitation provision may be accessed electronically at: *http://acquisition.gov/far/index.html/* or *http://farsite.hill.af.mil/vffara.htm*. Please note these addresses are subject to change.

If the Federal Acquisition Regulation (FAR) is not available at the locations indicated above, use the Department of State Acquisition website at *http://www.statebuy.state.gov* to access the link to the FAR, or use of an Internet "search engine" (for example, Google, Yahoo or Excite) is suggested to obtain the latest location of the most current FAR.

The following Federal Acquisition Regulation provisions are incorporated by reference (48 CFR CH. 1):

PROVISION	TITLE AND DATE
52.204-6	DATA UNIVERSAL NUMBERING SYSTEM (DUNS) NUMBER (JUL 2013)
52.204-7	SYSTEM FOR AWARD MANAGEMENT (JUL 2013)
52.214-34	SUBMISSION OF OFFERS IN THE ENGLISH LANGUAGE (APR 1991)
52.215-1	INSTRUCTIONS TO OFFERORS--COMPETITIVE ACQUISITION (JAN 2004)

K. EVALUATION CRITERIA

Award will be made to the lowest priced, acceptable, responsible quoter. The Government reserves the right to reject quotations that are unreasonably low or high in price.

The Government will determine acceptability by assessing the offeror's compliance with the terms of the RFQ. The Government will determine responsibility by analyzing whether the apparent successful quoter complies with the requirements of FAR 9.1, including:

- ability to comply with the required performance period, taking into consideration all existing commercial and governmental business commitments;
- satisfactory record of integrity and business ethics;
- necessary organization, experience, and skills or the ability to obtain them;
- necessary equipment and facilities or the ability to obtain them; and
- otherwise qualified and eligible to receive an award under applicable laws and regulations.

----------END OF THE PAGE----------

SECTION L - REPRESENTATIONS, CERTIFICATIONS AND OTHER STATEMENTS OF OFFERORS OR QUOTERS

L.1 52.204-3 TAXPAYER IDENTIFICATION (OCT 1998)

(a) Definitions

"Common parent", as used in this provision, means that corporate entity that owns or controls an affiliated group of corporations that files its Federal income tax returns on a consolidated basis, and of which the offeror is a member.

"Taxpayer Identification Number (TIN)", as used in this provision, means the number required by the IRS to be used by the offeror in reporting income tax and other returns. The TIN may be either a Social Security Number or an Employer Identification Number.

(b) All offerors must submit the information required in paragraphs (d)through (f) of this provision in order to comply with debt collection requirements of 31 U.S.C. 7701(c) and 3325 (d), reporting requirements of 26 USC 6041, 6041A, and 6050M and implementing regulations issued by the Internal Revenue Service (IRS). If the resulting contract is subject to the reporting requirements described in FAR 4.904, the failure or refusal by the offeror to furnish the information may result in a 31 percent reduction of payments otherwise due under the contract.

(c) The TIN may be used by the Government to collect and report on any delinquent amounts arising out of the offeror's relationship with the Government (3l USC 7701(c)(3)). If the resulting contract is subject to the payment reporting requirements described in FAR 4.904, the TIN provided hereunder may be matched with IRS records to verify the accuracy of the offeror's TIN.

(d) Taxpayer Identification Number (TIN)

TIN:	
	TIN has been applied for
	TIN is not required because:
	Offeror is a nonresident alien, foreign corporation, or foreign partnership that does not have income effectively connected with the conduct of a trade or business in the U.S. and does not have an office or place of business or a fiscal paying agent in the U.S.
	Offeror is an agency or instrumentality of a foreign government
	Offeror is an agency or instrumentality of the Federal Government

(e) Type of Organization

	Sole Proprietorship
	Partnership
	Corporate Entity (not tax exempt)
	Corporate Entity (tax exempt)
	Government entity (Federal, State or local)
	Foreign Government
	International organization per 26 CFR 1.6049-4
	Other:

(f) Common Parent

	Offeror is not owned or controlled by a common parent as defined in paragraph (a) of this clause.
	Name and TIN of common parent
Name	
TIN	

(End of provision)

L.2 52.204-8 ANNUAL REPRESENTATIONS AND CERTIFICATIONS (JAN 2014)

(a)(1) The North American Industry Classification System (NAICS) code(s) for this acquisition is/are:

236118 - Construction Management, residential remodeling
236220 - Construction Management, commercial and institutional building or Warehouse construction
237110 - Construction Management, water and sewage line and related structures
237310 - Construction Management, highway road, street or bridge
237990 - Construction Management, outdoor recreation facility

(2) The small business size standard is **$33.5 Million USD**.

(3) The small business size standard for a concern which submits an offer in its own name, other than on a construction or service contract, but which proposes to furnish a product which it did not itself manufacture, is 500 employees.

(b)(1) If the provision at 52.204-7, System for Award Management, is included in this solicitation, paragraph (d) of this provision applies.

(2) If the provision at 52.204-7 is not included in this solicitation, and the offeror is currently registered in the System for Award Management (SAM), and has completed the Representations and Certifications section of SAM electronically, the offeror may choose to use paragraph (d) of this provision instead of completing the corresponding individual representations and certifications in the solicitation. The offeror shall indicate which option applies by checking one of the following boxes:

[ ] (i) Paragraph (d) applies.

[ ] (ii) Paragraph (d) does not apply and the offeror has completed the individual representations and certifications in the solicitation.

(c)(1) The following representations or certifications in SAM are applicable to this solicitation as indicated:

(i) 52.203-2, Certificate of Independent Price Determination. This provision applies to solicitations when a firm-fixed-price contract or fixed-price contract with economic price adjustment is contemplated, unless—

(A) The acquisition is to be made under the simplified acquisition procedures in Part 13;

(B) The solicitation is a request for technical proposals under two-step sealed bidding procedures; or

(C) The solicitation is for utility services for which rates are set by law or regulation.

(ii) 52.203-11, Certification and Disclosure Regarding Payments to Influence Certain Federal Transactions. This provision applies to solicitations expected to exceed $150,000.

(iii) 52.204-3, Taxpayer Identification. This provision applies to solicitations that do not include the provision at 52.204-7, System for Award Management.

(iv) 52.204-5, Women-Owned Business (Other Than Small Business). This provision applies to solicitations that—

(A) Are not set aside for small business concerns;

(B) Exceed the simplified acquisition threshold; and

(C) Are for contracts that will be performed in the United States or its outlying areas.

(v) 52.209-2, Prohibition on Contracting with Inverted Domestic Corporations—Representation. This provision applies to solicitations using funds appropriated in fiscal years 2008, 2009, 2010, or 2012.

(vi) 52.209-5, Certification Regarding Responsibility Matters. This provision applies to solicitations where the contract value is expected to exceed the simplified acquisition threshold.

(vii) 52.214-14, Place of Performance—Sealed Bidding. This provision applies to invitations for bids except those in which the place of performance is specified by the Government.

(viii) 52.215-6, Place of Performance. This provision applies to solicitations unless the place of performance is specified by the Government.

(ix) 52.219-1, Small Business Program Representations (Basic & Alternate I). This provision applies to solicitations when the contract will be performed in the United States or its outlying areas.

(A) The basic provision applies when the solicitations are issued by other than DoD, NASA, and the Coast Guard.

(B) The provision with its Alternate I applies to solicitations issued by DoD, NASA, or the Coast Guard.

(x) 52.219-2, Equal Low Bids. This provision applies to solicitations when contracting by sealed bidding and the contract will be performed in the United States or its outlying areas.

(xi) 52.222-22, Previous Contracts and Compliance Reports. This provision applies to solicitations that include the clause at 52.222-26, Equal Opportunity.

(xii) 52.222-25, Affirmative Action Compliance. This provision applies to solicitations, other than those for construction, when the solicitation includes the clause at 52.222-26, Equal Opportunity.

(xiii) 52.222-38, Compliance with Veterans' Employment Reporting Requirements. This provision applies to solicitations when it is anticipated the contract award will exceed the simplified acquisition threshold and the contract is not for acquisition of commercial items.

(xiv) 52.223-1, Biobased Product Certification. This provision applies to solicitations that require the delivery or specify the use of USDA–designated items; or include the clause at 52.223-2, Affirmative Procurement of Biobased Products Under Service and Construction Contracts.

(xv) 52.223-4, Recovered Material Certification. This provision applies to solicitations that are for, or specify the use of, EPA–designated items.

(xvi) 52.225-2, Buy American Act Certificate. This provision applies to solicitations containing the clause at 52.225-1.

(xvii) 52.225-4, Buy American Act—Free Trade Agreements—Israeli Trade Act Certificate. (Basic, Alternates I, II, and III.) This provision applies to solicitations containing the clause at 52.225-3.

(A) If the acquisition value is less than $25,000, the basic provision applies.

(B) If the acquisition value is $25,000 or more but is less than $50,000, the provision with its Alternate I applies.

(C) If the acquisition value is $50,000 or more but is less than $79,507, the provision with its Alternate II applies.

(D) If the acquisition value is $79,507 or more but is less than $100,000, the provision with its Alternate III applies.

(xviii) 52.225-6, Trade Agreements Certificate. This provision applies to solicitations containing the clause at 52.225-5.

(xix) 52.225-20, Prohibition on Conducting Restricted Business Operations in Sudan—Certification. This provision applies to all solicitations.

(xx) 52.225-25, Prohibition on Contracting with Entities Engaging in Certain Activities or Transactions Relating to Iran-Representation and Certifications. This provision applies to all solicitations.

(xxi) 52.226-2, Historically Black College or University and Minority Institution Representation. This provision applies to—

(A) Solicitations for research, studies, supplies, or services of the type normally acquired from higher educational institutions; and

(B) For DoD, NASA, and Coast Guard acquisitions, solicitations that contain the clause at 52.219-23, Notice of Price Evaluation Adjustment for Small Disadvantaged Business Concerns.

(2) The following certifications are applicable as indicated by the Contracting Officer: [*Contracting Officer check as appropriate.*]

__ (i) 52.219-22, Small Disadvantaged Business Status.

__ (A) Basic.

__ (B) Alternate I.

__ (ii) 52.222-18, Certification Regarding Knowledge of Child Labor for Listed End Products.

__ (iii) 52.222-48, Exemption from Application of the Service Contract Act to Contracts for Maintenance, Calibration, or Repair of Certain Equipment Certification.

__ (iv) 52.222-52, Exemption from Application of the Service Contract Act to Contracts for Certain Services–Certification.

__ (v) 52.223-9, with its Alternate I, Estimate of Percentage of Recovered Material Content for EPA–Designated Products (Alternate I only).

__ (vi) 52.227-6, Royalty Information.

__ (A) Basic.

__(B) Alternate I.

__ (vii) 52.227-15, Representation of Limited Rights Data and Restricted Computer Software.

(d) The offeror has completed the annual representations and certifications electronically via the SAM website accessed through https://www.acquisition.gov. After reviewing the SAM database information, the offeror verifies by submission of the offer that the representations and certifications currently posted electronically that apply to this solicitation as indicated in

paragraph (c) of this provision have been entered or updated within the last 12 months, are current, accurate, complete, and applicable to this solicitation (including the business size standard applicable to the NAICS code referenced for this solicitation), as of the date of this offer and are incorporated in this offer by reference (see FAR 4.1201); except for the changes identified below [*offeror to insert changes, identifying change by clause number, title, date*]. These amended representation(s) and/or certification(s) are also incorporated in this offer and are current, accurate, and complete as of the date of this offer.

FAR CLAUSE #	TITLE	DATE	CHANGE
_____	_____	_____	_____

Any changes provided by the offeror are applicable to this solicitation only, and do not result in an update to the representations and certifications posted on SAM.

(End of provision)

L.3. 52.225-18 PLACE OF MANUFACTURE (SEPT 2006)

(a) *Definitions*. As used in this clause—

" Manufactured end product" means any end product in Federal Supply Classes (FSC) 1000-9999, except—

(1) FSC 5510, Lumber and Related Basic Wood Materials;
(2) Federal Supply Group (FSG) 87, Agricultural Supplies;
(3) FSG 88, Live Animals;
(4) FSG 89, Food and Related Consumables;
(5) FSC 9410, Crude Grades of Plant Materials;
(6) FSC 9430, Miscellaneous Crude Animal Products, Inedible;
(7) FSC 9440, Miscellaneous Crude Agricultural and Forestry Products;
(8) FSC 9610, Ores;
(9) FSC 9620, Minerals, Natural and Synthetic; and
(10) FSC 9630, Additive Metal Materials.

"Place of manufacture" means the place where an end product is assembled out of components, or otherwise made or processed from raw materials into the finished product that is to be provided to the Government. If a product is disassembled and reassembled, the place of reassembly is not the place of manufacture.

(b) For statistical purposes only, the offeror shall indicate whether the place of manufacture of the end products it expects to provide in response to this solicitation is predominantly—

(1) [ ] In the United States (Check this box if the total anticipated price of offered end products manufactured in the United States exceeds the total anticipated price of offered end products manufactured outside the United States); or
(2) [ ] Outside the United States.

(End of provision)

L.4 AUTHORIZED CONTRACT ADMINISTRATOR

If the offeror does not fill-in the blanks below, the official who signed the offer will be deemed to be the offeror's representative for Contract Administration, which includes all matters pertaining to payments.

Name:
Telephone Number:
Address:

L.5 652.228-70 DEFENSE BASE ACT – COVERED CONTRACTOR EMPLOYEES (JUNE 2006)

(a) Bidders/offerors shall indicate below whether or not any of the following categories of employees will be employed on the resultant contract, and, if so, the number of such employees:

Category	Yes/No	Number	
(1) United States citizens or residents			
(2) Individuals hired in the United States, regardless of citizenship			
(3) Local nationals or third country nationals where contract performance takes place in a country where there are no local workers' compensation laws		local nationals:	
		third-country nationals:	
(4) Local nationals or third country nationals where contract performance takes place in a country where there are local workers' compensation laws		local nationals:	
		third-country nationals:	

(c) The Contracting Officer has determined that for performance in the country of Saudi Arabia

X Workers' compensation laws exist that will cover local nationals and third country nationals.

☐ Workers' compensation laws do not exist that will cover local nationals and third country nationals.

(c) If the bidder/offeror has indicated "yes" in block (a)(4) of this provision, the bidder/offeror shall not purchase Defense Base Act insurance for those employees. However, the bidder/offeror shall assume liability toward the employees and their beneficiaries for war-hazard injury, death, capture, or detention, in accordance with the clause at FAR 52.228-4.

(d) RESERVED

(End of provision)

----------END OF THE PAGE----------

ATTACHMENT #1 - SAMPLE LETTER OF BANK GUARANTY

Place [ ]
Date [ ]

Contracting Officer
U.S. Embassy, **[*Note to CO: insert Post name*]**
[*Note to CO: insert mailing address*]

Letter of Guaranty No. _____

SUBJECT: Performance and Guaranty

The Undersigned, acting as the duly authorized representative of the bank, declares that the bank hereby guarantees to make payment to the Contracting Officer by check made payable to the Treasurer of the United States, immediately upon notice, after receipt of a simple written request from the Contracting Officer, immediately and entirely without any need for the Contracting Officer to protest or take any legal action or obtain the prior consent of the Contractor to show any other proof, action, or decision by an other authority, up to the sum of **[*amount equal to 20% of the contract price in U.S. dollars during the period ending with the date of final acceptance and 10% of the contract price during contract guaranty period*]**, which represents the deposit required of the Contractor to guarantee fulfillment of his obligations for the satisfactory, complete, and timely performance of the said contract **[*contract number*]** for **[*description of work*]** at **[*location of work*]** in strict compliance with the terms, conditions and specifications of said contract, entered into between the Government and **[*name of contractor*]** of **[*address of contractor*]** on **[*contract date*],** plus legal charges of 10% per annum on the amount called due, calculated on the sixth day following receipt of the Contracting Officer's written request until the date of payment.

The undersigned agrees and consents that said contract may be modified by Change Order or Supplemental Agreement affecting the validity of the guaranty provided, however, that the amount of this guaranty shall remain unchanged.

The undersigned agrees and consents that the Contracting Officer may make repeated partial demands on the guaranty up to the total amount of this guaranty, and the bank will promptly honor each individual demand.

This letter of guaranty shall remain in effect until 3 months after completion of the guaranty period of Contract requirement.

Depository Institution: **[*name*]**
Address: _____
Representatives: _____ Location: _____
State of Inc.: _____
Corporate Seal: _____

ATTACHMENT #2 – SCOPE OF WORK

US Department of State – Regional Security Office Jeddah

STATEMENT OF WORK
FOR
Mobile Guard Tower (MGTS2)

June 08, 2014

1.0 GENERAL REQUIREMENTS

1.1 The Contractor shall provide all equipment, material, tools, personnel and supervision to complete this project according to the requirements outlined in the Statement of Work.

1.2 The work shall be executed in a diligent manner in accordance with the negotiated firm fixed price and performance period. The period of performance from notice to proceed to completing final punch list items is 60 calendar days.

1.3 The Contractor shall perform all work during the U.S Consulate's normal business hours. Normal business hours for the U.S Consulate are Sunday through Thursday, 08:00 AM to 5:30 PM. Work performed outside these hours must be approved in advance by the Contracting Officers or his Representative.

1.4 If any of the Contractor performed services do not conform to the contract requirements, the Contracting Officer will require the Contractor to perform the services again until the final product conforms to the contract requirements.

1.5 The Contractor will be responsible for the security of his/her tools, materials and equipment left on site overnight, on weekends, or on holidays.

1.6 Contractors interested in bidding on this project are strongly encouraged to attend the site visit to examine the elements required by this Statement of Work.

1.7 Questions related to this Statement of Work shall be directed to the Contracting Officer, in writing.

2.0 LOCATION

2.1 Location will be further discussed during walk-through by RSO.

3.0 RESPONSIBILITY OF THE CONTRACTOR

3.1 The contractor will be required to furnish company badges or identifications for all workers to gain access to the U.S. Consulate in order to be allowed to work on any U.S. Consulate project. The contractor is also required to provide a list of all

workers, with ID numbers, as well as any vehicles and their make, model type and color in writing via e-mail to the U.S. Consulate upon being notified to proceed with any work. All workers present will be required to present an identification to gain access to the U.S. Consulate. All contracted employees will be given a visitor badge to wear while at the U.S. Consulate. Additionally, the contractor will furnish their own food and water (drink) for their workers. The U.S. Consulate is not required to provide these items for workers.

3.2 Every contractor working at the U.S. Consulate will advise all of their workers that enter the U.S. Consulate compound that they are not to wander around from their designated work sites. All contractors will have U.S. Consulate escorts while they perform their work on the Consulate compound. Failure to follow this will result in the violators being banned from working on the U.S. Consulate compound again. This may also have an adverse effect on the contractor in regards to bidding on future U.S. Consulate contracts.

3.3 The Contractor shall be responsible for the professional quality, technical accuracy, and coordination of all construction activities and/or other services furnished under this contract. Omitting any part of this statement of work from the contractor's proposal will result with the contractor incurring all extra costs in order to complete this statement of work as it is written. The Contractor shall, without additional compensation from the U.S. Consulate, correct any errors or deficiencies in its construction and/or other provided services. The Contractor shall make these corrections within 72 hours after being notified of such errors or deficiencies.

3.4 The Contractor shall identify a Project Site Manager who shall be responsible for the overall project management during execution of this contract. The Project Site Manager shall represent the Contractor during construction and impromptu site meetings. The Project Site Manager shall speak and understand English and be authorized to received and act upon verbal and written instructions provided by the Contracting Officer or his representative, provided these instructions don't alter the material make up of this Statement of Work.

3.5 All documents produced for this project and provided to the Contractor by the U.S. Consulate, and/or Contractor produced documents related to this project are the sole property of the U.S. Embassy and shall be returned to the Contracting Officer at the completion of the project.

3.6 All materials installed on this project shall be new. Installation of used materials is prohibited.

3.7 The Contractor shall verify that all materials, equipment, and systems provide operational dependability. The Contractor shall assure that the systems installed are in accordance with International Building Code or US National Electrical Code standards and manufacturers guidance.

3.8 Any costs associated with purchased supplies, whether locally procured or imported, or services subcontracted by the Contractor, shall be the sole responsibility of the Contractor.

3.9 The Contractor is responsible for job site safety throughout the duration of this project. Appropriate measure shall be implemented to protect both U.S. Embassy and Contractor personnel from accidents. The Contractor must provide his/her employees with the proper personal protective equipment (PPE) to minimize accidents. Typical PPE includes hard-hats, safety glasses, and full-body harnesses for fall protection, welding face shields, and any other PPE that may be appropriate. The Contractor shall promptly report all lost time accidents to the Contracting Officers or his Representative, including disabling or fatal injuries.

3.10 The Contractor shall be and remain liable to the U.S. Consulate, in accordance with applicable laws, for all damages caused by the Contractor's negligence to U.S. Consulate property, whether leased or owned. The rights and remedies for the U.S. Consulate provided for under this contract are in addition to any other rights and remedies provided by law.

3.11 The Contractor shall maintain an active liability insurance policy, with the appropriate level of coverage, for the duration of this project. The Contractor shall provide the Contracting Officer with proof of insurance coverage either via a Certificate of Insurance, a Surety Bond, or some other means recognize by the construction industry in the Kingdom of Saudi Arabia. The contractor is responsible for the safety & health of its employees. Full compliance with OSHA/International & Saudi safety rules & requirements is mandatory. In addition the contractor shall be responsible for health & environmental requirements. Failure to comply may result in disqualification and removal from the work location.

3.12 The Contractor shall keep the work site free of accumulation of waste material and other debris at all times. Disposal of excess material, waste material and other debris shall be the sole responsibility of the Contractor. Upon completing construction, the Contractor shall remove all temporary facilities, construction barriers, excess material and rubbish, and shall thoroughly clean the construction areas.

3.13 The Contractor shall warranty all material, equipment and workmanship for one full year after completion of the project. The warranty period will begin when the Contracting Officer accepts the project as being complete.

3.14 The contractor shall admit no one to the work location, except as necessary to perform the work as defined in the scope of work, without, in each instance, first obtaining the approval of RSO or GSO Procurement.

3.15 Contractor's employees and its subcontractor's employees shall abide by U.S. Consulate security regulations and procedures. Security personnel are authorized to search vehicles, lunch boxes, toolboxes, and persons without prior notification.

3.16 Construction activities resulting in overtime which is necessary to protect or complete the work will be to contractor's expense.

3.17 The Contracting Officer has the authority to issue a temporary stop work order during the execution of this project. The Contractor shall be compensated with a time extensions only if a stop work order is issued, and only for the hours that the Contractor was forced to stop work.

4.0 PROPOSAL AND PAYMENTS

4.1 The Contractor shall provide a firm fixed-price proposal to the Contracting Officer covering all elements of this project. Failure on the part of the Contractor to understand the full scope of this project, or omissions in their proposal will not constitute grounds for additional payments or contract changes. This Statement of Work is the guideline for the contractor's proposal. The contractor is expected to provide a proposal that addresses every line in this Statement of Work. Failure to include every aspect of this statement of work in the contractor's proposal will not absolve the contractor from performing the work required at the contractor's own expense.

4.2 The Contractor shall submit one copy of all payment invoices with the appropriate supporting documents to the Contracting Officer or his Representative. The Contracting Officer or his Representative will determine if the invoice is compete and proper, and if billed services have been satisfactorily performed. If it is determined that the amount billed is correct, the Contracting Officer or his Representative will submit the invoice for payment. Payment will be made within 30 days after submission of a proper invoice. Prepayment for services will not be authorized. If it is determined that the amount billed is incorrect, the invoice will be returned to the Contractor for correction. The Prompt Payment Act only applies once a proper invoice has been received and accepted by the Contracting Officer.

4.3 The Contractor shall submit to Contracting Officer's Representative a detailed plan to include expected time frame from beginning of construction until delivery of the products, to include expected delivery date and any foreseeable delays.

4.4 All bids will be submitted with detailed description of work to be performed with drawings of fabrications.

5.0 DESCRIPTION OF WORK

THE FINAL DESIGNS AND ALL MATERIALS TO BE USED MUST RECEIVE RSO APPROVAL BEFORE WORK COMMENCES ON ANY PROJECT. RSO APPROVAL IS ALSO REQUISITE FOR ACCEPTANCE OF ANY PROJECT COMPLETION.

5.1 Construct 6 portable guard towers (MGTS2): this includes site prep, shipping and erection costs, steel fabrication, concrete, door (15FE/BR), window (15FE/BR), and gun-ports.

5.2 This system goes up in 10hrs on 8" compacted gravel so little site work. Basic load to maintain AC, and electrical outlets.

5.3 RSO has the complete SBU drawings. These drawing can only be given to one of the cleared sub-contractors listed from OBO.

CLEAN UP

6.1 Contractor will clean up all excess materials and trash around all work sites upon completion.

6.2 Contractor is responsible for any damage incurred during work operations.

6.3 Contractor will take commands for all material movements from RSO personnel.

WARRANTY

7.1 Contractor to provide written, certified warranties for all completed construction. The warranty period shall cover a minimum of two (2) years.

------End of Statement of Work------

ATTACHMENT #3 - DRAWINGS

[*Note to Contracting Officer: attach detailed specifications*]

US Department of State – Regional Security Office Jeddah

STATEMENT OF WORK
FOR
Mobile Guard Tower (MGTS2)

June 08, 2014

1.0 GENERAL REQUIREMENTS

1.1 The Contractor shall provide all equipment, material, tools, personnel and supervision to complete this project according to the requirements outlined in the Statement of Work.

1.2 The work shall be executed in a diligent manner in accordance with the negotiated firm fixed price and performance period. The period of performance from notice to proceed to completing final punch list items is 60 calendar days.

1.3 The Contractor shall perform all work during the U.S Consulate's normal business hours. Normal business hours for the U.S Consulate are Sunday through Thursday, 08:00 AM to 5:30 PM. Work performed outside these hours must be approved in advance by the Contracting Officers or his Representative.

1.4 If any of the Contractor performed services do not conform to the contract requirements, the Contracting Officer will require the Contractor to perform the services again until the final product conforms to the contract requirements.

1.5 The Contractor will be responsible for the security of his/her tools, materials and equipment left on site overnight, on weekends, or on holidays.

1.6 Contractors interested in bidding on this project are strongly encouraged to attend the site visit to examine the elements required by this Statement of Work.

1.7 Questions related to this Statement of Work shall be directed to the Contracting Officer, in writing.

2.0 LOCATION

2.1 Location will be further discussed during walk-through by RSO.

3.0 RESPONSIBILITY OF THE CONTRACTOR

3.1 The contractor will be required to furnish company badges or identifications for all workers to gain access to the U.S. Consulate in order to be allowed to work on any U.S. Consulate project. The contractor is also required to provide a list of all

workers, with ID numbers, as well as any vehicles and their make, model type and color in writing via e-mail to the U.S. Consulate upon being notified to proceed with any work. All workers present will be required to present an identification to gain access to the U.S. Consulate. All contracted employees will be given a visitor badge to wear while at the U.S. Consulate. Additionally, the contractor will furnish their own food and water (drink) for their workers. The U.S. Consulate is not required to provide these items for workers.

3.2 Every contractor working at the U.S. Consulate will advise all of their workers that enter the U.S. Consulate compound that they are not to wander around from their designated work sites. All contractors will have U.S. Consulate escorts while they perform their work on the Consulate compound. Failure to follow this will result in the violators being banned from working on the U.S. Consulate compound again. This may also have an adverse effect on the contractor in regards to bidding on future U.S. Consulate contracts.

3.3 The Contractor shall be responsible for the professional quality, technical accuracy, and coordination of all construction activities and/or other services furnished under this contract. Omitting any part of this statement of work from the contractor's proposal will result with the contractor incurring all extra costs in order to complete this statement of work as it is written. The Contractor shall, without additional compensation from the U.S. Consulate, correct any errors or deficiencies in its construction and/or other provided services. The Contractor shall make these corrections within 72 hours after being notified of such errors or deficiencies.

3.4 The Contractor shall identify a Project Site Manager who shall be responsible for the overall project management during execution of this contract. The Project Site Manager shall represent the Contractor during construction and impromptu site meetings. The Project Site Manager shall speak and understand English and be authorized to received and act upon verbal and written instructions provided by the Contracting Officer or his representative, provided these instructions don't alter the material make up of this Statement of Work.

3.5 All documents produced for this project and provided to the Contractor by the U.S. Consulate, and/or Contractor produced documents related to this project are the sole property of the U.S. Embassy and shall be returned to the Contracting Officer at the completion of the project.

3.6 All materials installed on this project shall be new. Installation of used materials is prohibited.

3.7 The Contractor shall verify that all materials, equipment, and systems provide operational dependability. The Contractor shall assure that the systems installed are in accordance with International Building Code or US National Electrical Code standards and manufacturers guidance.

3.8 Any costs associated with purchased supplies, whether locally procured or imported, or services subcontracted by the Contractor, shall be the sole responsibility of the Contractor.

3.9 The Contractor is responsible for job site safety throughout the duration of this project. Appropriate measure shall be implemented to protect both U.S. Embassy and Contractor personnel from accidents. The Contractor must provide his/her employees with the proper personal protective equipment (PPE) to minimize accidents. Typical PPE includes hard-hats, safety glasses, and full-body harnesses for fall protection, welding face shields, and any other PPE that may be appropriate. The Contractor shall promptly report all lost time accidents to the Contracting Officers or his Representative, including disabling or fatal injuries.

3.10 The Contractor shall be and remain liable to the U.S. Consulate, in accordance with applicable laws, for all damages caused by the Contractor's negligence to U.S. Consulate property, whether leased or owned. The rights and remedies for the U.S. Consulate provided for under this contract are in addition to any other rights and remedies provided by law.

3.11 The Contractor shall maintain an active liability insurance policy, with the appropriate level of coverage, for the duration of this project. The Contractor shall provide the Contracting Officer with proof of insurance coverage either via a Certificate of Insurance, a Surety Bond, or some other means recognize by the construction industry in the Kingdom of Saudi Arabia. The contractor is responsible for the safety & health of its employees. Full compliance with OSHA/International & Saudi safety rules & requirements is mandatory. In addition the contractor shall be responsible for health & environmental requirements. Failure to comply may result in disqualification and removal from the work location.

3.12 The Contractor shall keep the work site free of accumulation of waste material and other debris at all times. Disposal of excess material, waste material and other debris shall be the sole responsibility of the Contractor. Upon completing construction, the Contractor shall remove all temporary facilities, construction barriers, excess material and rubbish, and shall thoroughly clean the construction areas.

3.13 The Contractor shall warranty all material, equipment and workmanship for one full year after completion of the project. The warranty period will begin when the Contracting Officer accepts the project as being complete.

3.14 The contractor shall admit no one to the work location, except as necessary to perform the work as defined in the scope of work, without, in each instance, first obtaining the approval of RSO or GSO Procurement.

3.15 Contractor's employees and its subcontractor's employees shall abide by U.S. Consulate security regulations and procedures. Security personnel are authorized to search vehicles, lunch boxes, toolboxes, and persons without prior notification.

3.16 Construction activities resulting in overtime which is necessary to protect or complete the work will be to contractor's expense.

3.17 The Contracting Officer has the authority to issue a temporary stop work order during the execution of this project. The Contractor shall be compensated with a time extensions only if a stop work order is issued, and only for the hours that the Contractor was forced to stop work.

4.0 PROPOSAL AND PAYMENTS

4.1 The Contractor shall provide a firm fixed-price proposal to the Contracting Officer covering all elements of this project. Failure on the part of the Contractor to understand the full scope of this project, or omissions in their proposal will not constitute grounds for additional payments or contract changes. This Statement of Work is the guideline for the contractor's proposal. The contractor is expected to provide a proposal that addresses every line in this Statement of Work. Failure to include every aspect of this statement of work in the contractor's proposal will not absolve the contractor from performing the work required at the contractor's own expense.

4.2 The Contractor shall submit one copy of all payment invoices with the appropriate supporting documents to the Contracting Officer or his Representative. The Contracting Officer or his Representative will determine if the invoice is compete and proper, and if billed services have been satisfactorily performed. If it is determined that the amount billed is correct, the Contracting Officer or his Representative will submit the invoice for payment. Payment will be made within 30 days after submission of a proper invoice. Prepayment for services will not be authorized. If it is determined that the amount billed is incorrect, the invoice will be returned to the Contractor for correction. The Prompt Payment Act only applies once a proper invoice has been received and accepted by the Contracting Officer.

4.3 The Contractor shall submit to Contracting Officer's Representative a detailed plan to include expected time frame from beginning of construction until delivery of the products, to include expected delivery date and any foreseeable delays.

4.4 All bids will be submitted with detailed description of work to be performed with drawings of fabrications.

5.0 DESCRIPTION OF WORK

THE FINAL DESIGNS AND ALL MATERIALS TO BE USED MUST RECEIVE RSO APPROVAL BEFORE WORK COMMENCES ON ANY PROJECT. RSO APPROVAL IS ALSO REQUISITE FOR ACCEPTANCE OF ANY PROJECT COMPLETION.

5.1 Construct 6 portable guard towers (MGTS2): this includes site prep, shipping and erection costs, steel fabrication, concrete, door (15FE/BR), window (15FE/BR), and gun-ports.

5.2 This system goes up in 10hrs on 8" compacted gravel so little site work. Basic load to maintain AC, and electrical outlets.

5.3 RSO has the complete SBU drawings. These drawing can only be given to one of the cleared sub-contractors listed from OBO.

CLEAN UP

6.1 Contractor will clean up all excess materials and trash around all work sites upon completion.

6.2 Contractor is responsible for any damage incurred during work operations.

6.3 Contractor will take commands for all material movements from RSO personnel.

WARRANTY

7.1 Contractor to provide written, certified warranties for all completed construction. The warranty period shall cover a minimum of two (2) years.

------End of Statement of Work------

Unclassifed

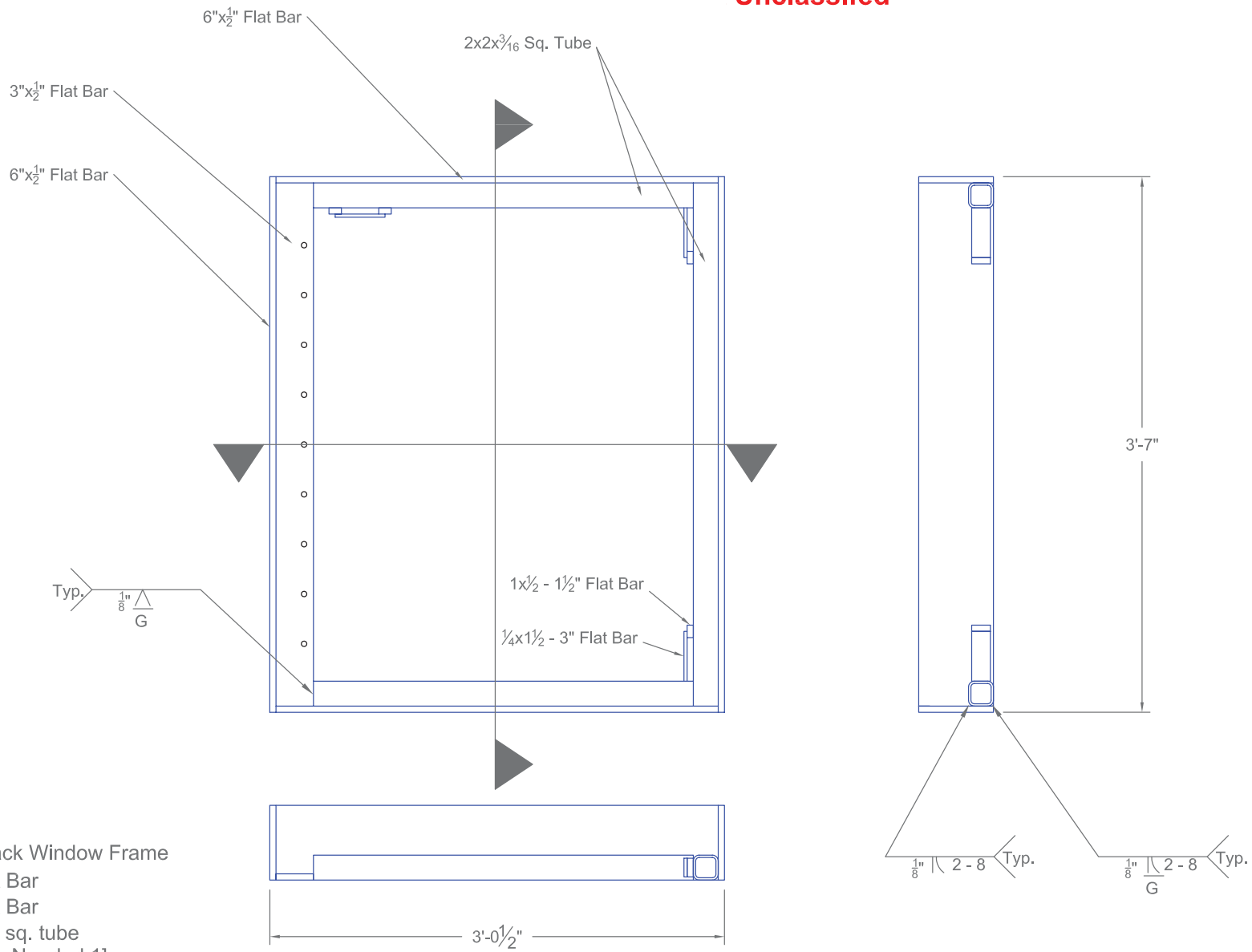

Weld Back Window Frame
6x½ Flat Bar
3x½ Flat Bar
2x2x3/16" sq. tube
[Quantity Needed 1]

Notes:
1. Tolerances:
   1.1. Square "corner to corner" (±1/32)

United States Department of State
Bureau of Diplomatic Security
DS/PSD/RD
SA-14, 10th Flor
1400 Wilson Blvd.
Arlington, VA 20530

Project WGS-4	Window Assembly "Opening"
250x250	
scale: 1/4" = 1'-0"	

Unclassifed

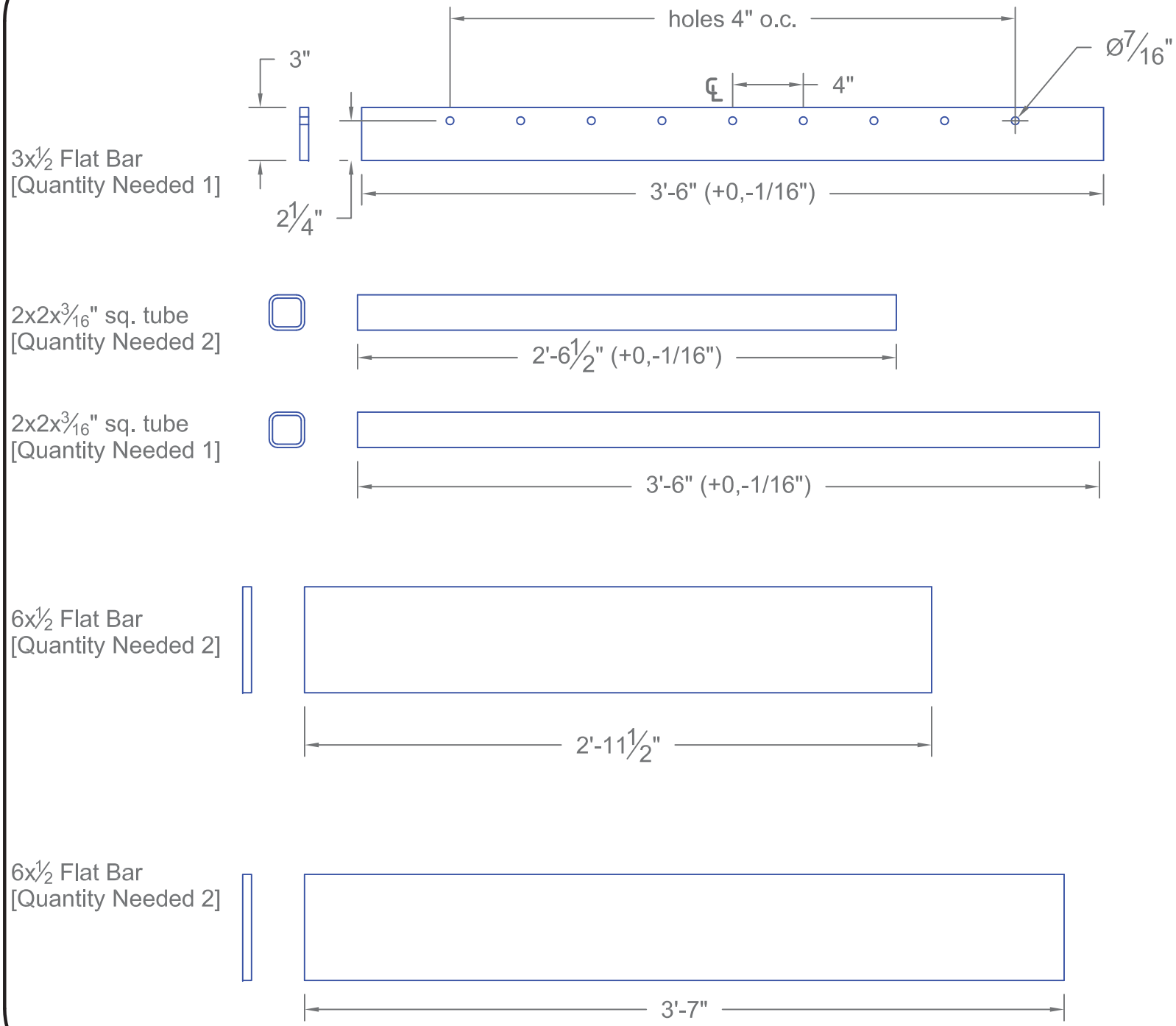

Notes:
1. Bolt holes [round] shall be drilled
2. Tolerances:
   2.1. length ($\pm\frac{1}{16}$")
   2.2. round hole placement ($\pm\frac{1}{32}$")

United States Department of State
Bureau of Diplomatic Security
DS/PSD/RD
SA-14, 10th Floor
1400 Wilson Blvd.
Arlington, VA 20520

Project: MGT52_v4	Window Assembly "Opening"
25Oct2013	
scale: 1/2" to 12"	

Parts for Back Panel Window frame

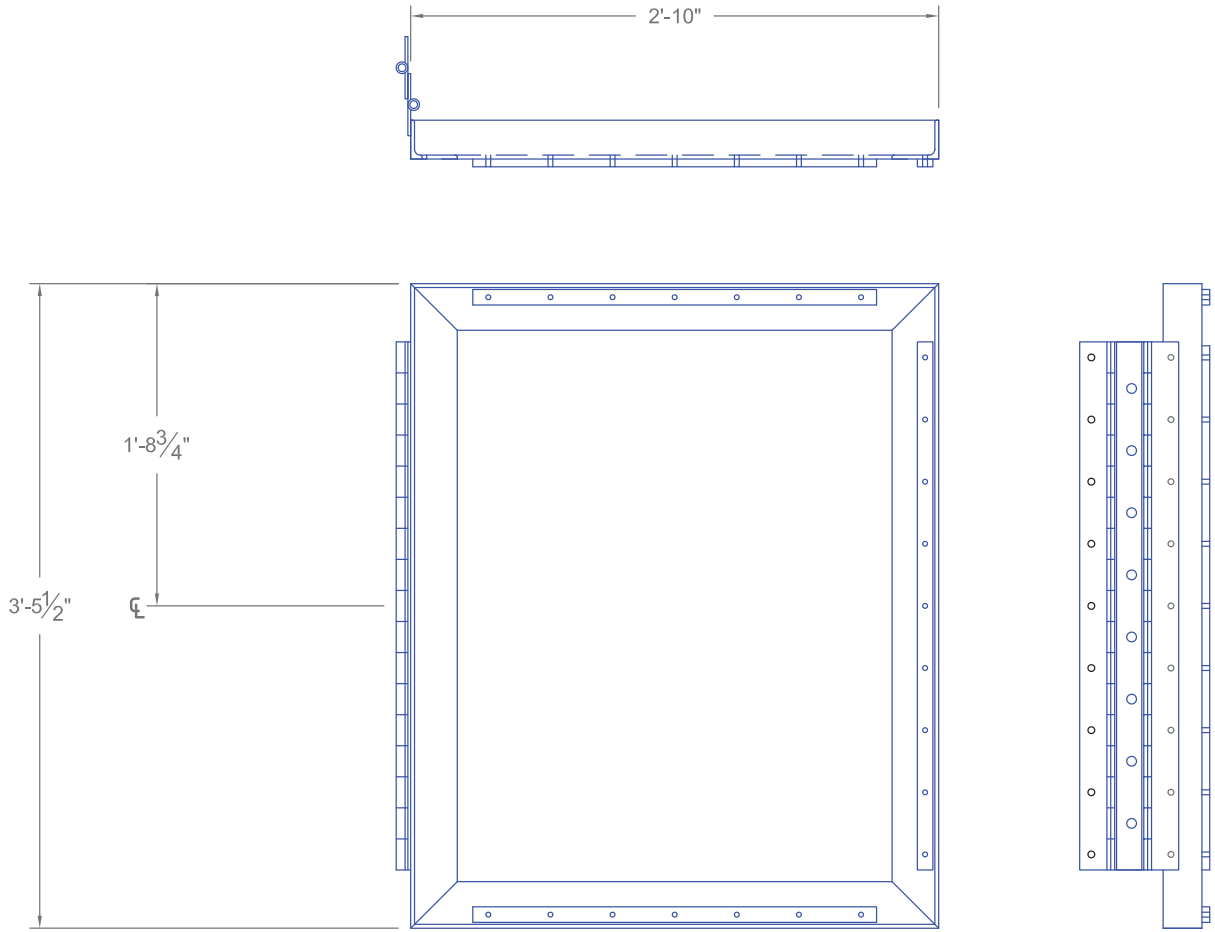

Weld Outer Back w/Hinge
L3x2½x¼" Angles
[Quantity Needed 1]

Notes:
1. Bolt holes [round] shall be drilled and tapped

2. Tolerances:
   2.1. Square "corner to corner" (+/-1/32)

3. Hinge product No. S189040060 from nehinge.com [continous steel hinge]

United States Department of State
Bureau of Diplomatic Security
DS/ PSD/ PD
SA-14, 10th Flor
1400 Wilson Blvd.
Arlington, VA 20522

Project/WO/S#:	Window Assembly Opening
250x230	
scale:	

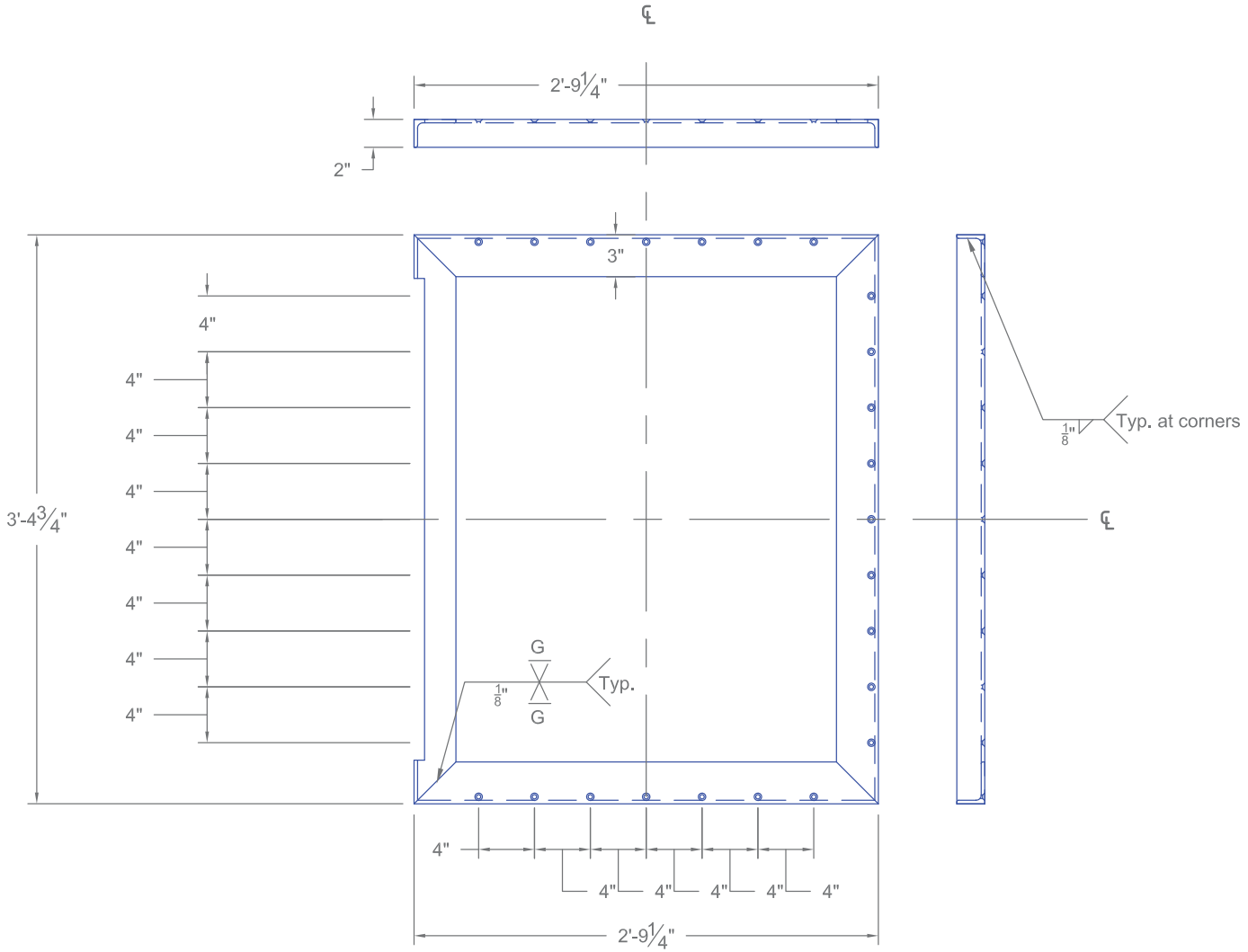

Scale 1½" = 1'

Weld Inner Back Window Angles Together
L3x2x¼" Angles
[Quantity Needed 1]

Notes:
1. Bolt holes [round] shall be drilled and tapped

2. Tolerances:
   2.1. Square "corner to corner" (+/-1/32)

United States Department of State
Bureau of Diplomatic Security
DS/ PSD/ PD
SA-14, 10th Floor
1400 Wilson Blvd.
Arlington, VA 20522

Project WGS-__-__	Window Assembly Opening
250x250	
Scale 1½" = 1'	

Unclassifed

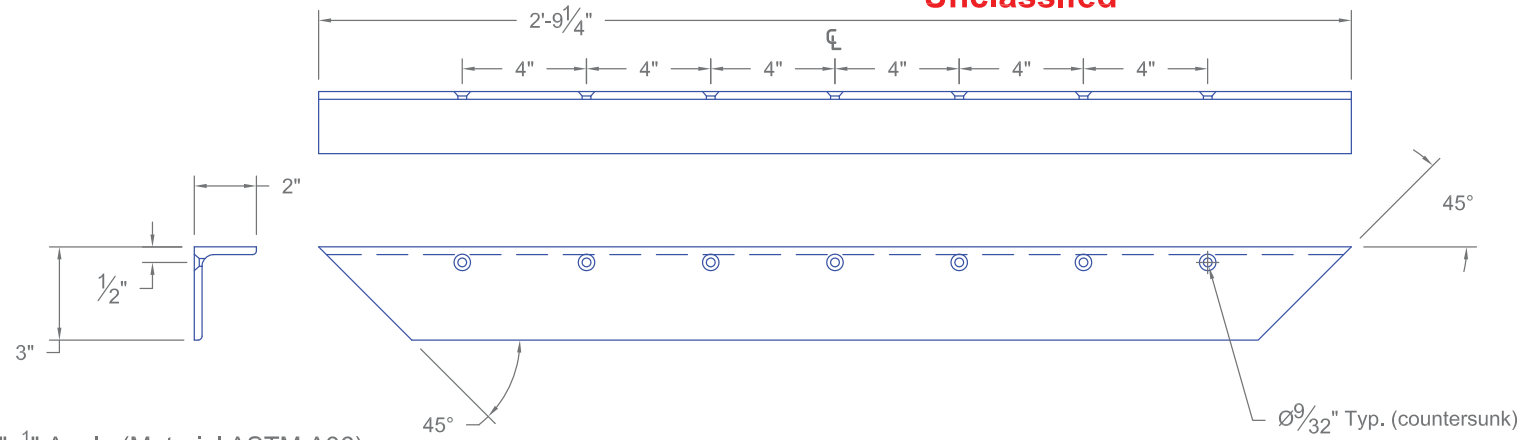

Scale 3" = 1'

3"x2"x¼" Angle (Material ASTM A36)
Part "back inner window" [Quantity needed 2]

Notes:
1. Bolt holes [round] shall be drilled

2. Tolerances:
2.1. length (+/-1/32")
2.2. round hole placement (+/-1/64")

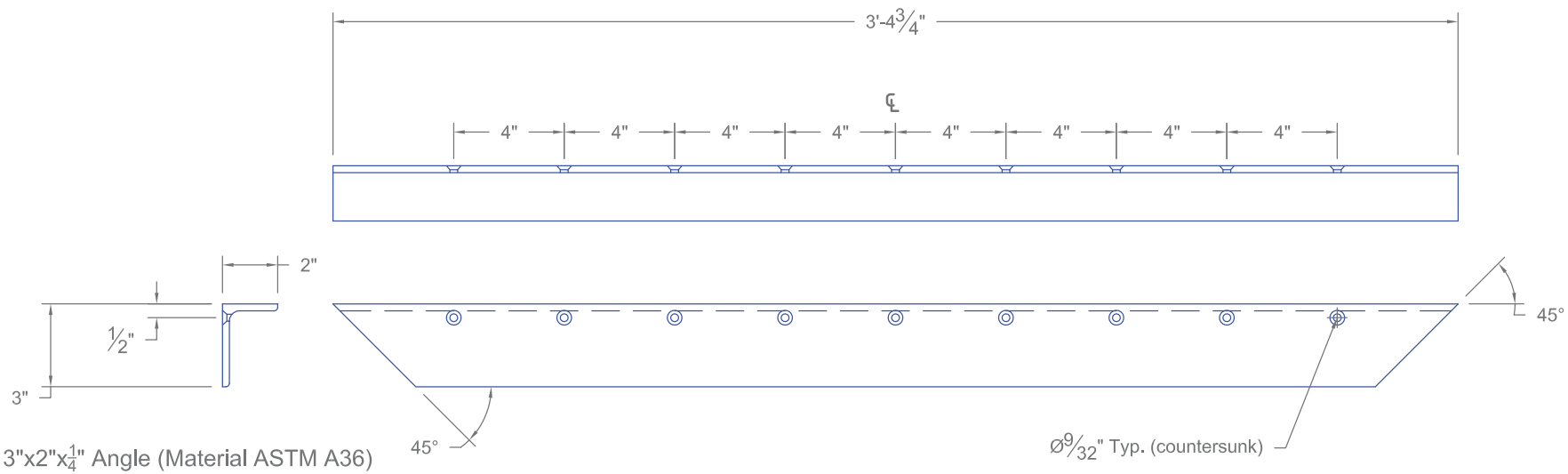

3"x2"x¼" Angle (Material ASTM A36)
Part "back inner window" [Quantity needed 1]

United States Department of State
Bureau of Diplomatic Security
DS/ PSD/ ISP
SA-18, 10th Floor
HOOVER Bldg.
Arlington, VA 20520

Project/WO/S#
250x2018
scale 3" = 1'-0"

Unclassifed

Unclassifed

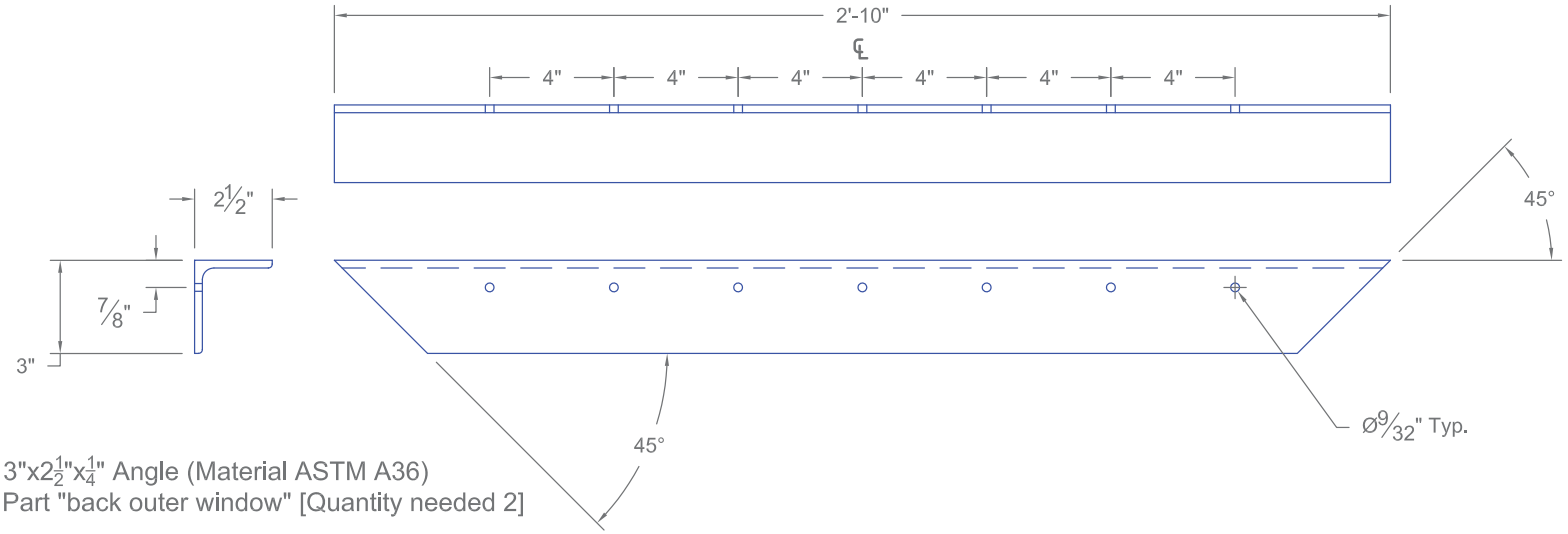

Scale 3" = 1'

3"x2½"x¼" Angle (Material ASTM A36)
Part "back outer window" [Quantity needed 2]

Notes:
1. Bolt holes [round] shall be drilled

2. Tolerances:
   2.1. length (+/-1/32")
   2.2. round hole placement (+/-1/64")

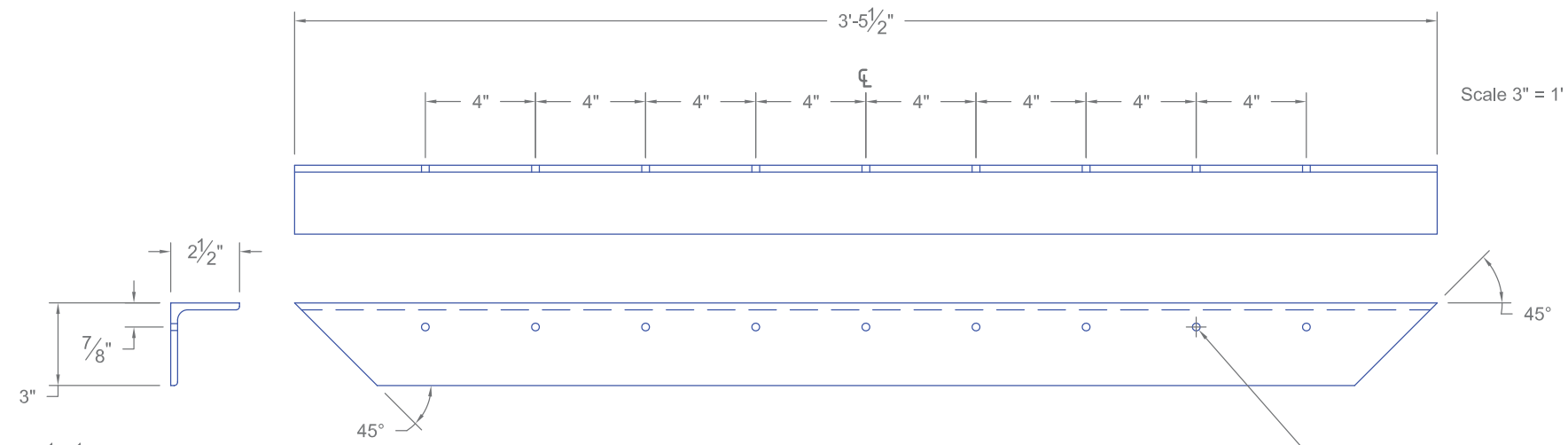

Scale 3" = 1'

3"x2½"x¼" Angle (Material ASTM A36)
Part "back outer window" [Quantity needed 2]

United States Department of State
Bureau of Diplomatic Security
DS/PSP/ID
SA-16, 10th Floor
1800 Wilson Blvd.
Arlington, VA 20520

Project/WO/S#
250x2318
scale 3" = 1'-0"

Unclassifed

Unclassifed

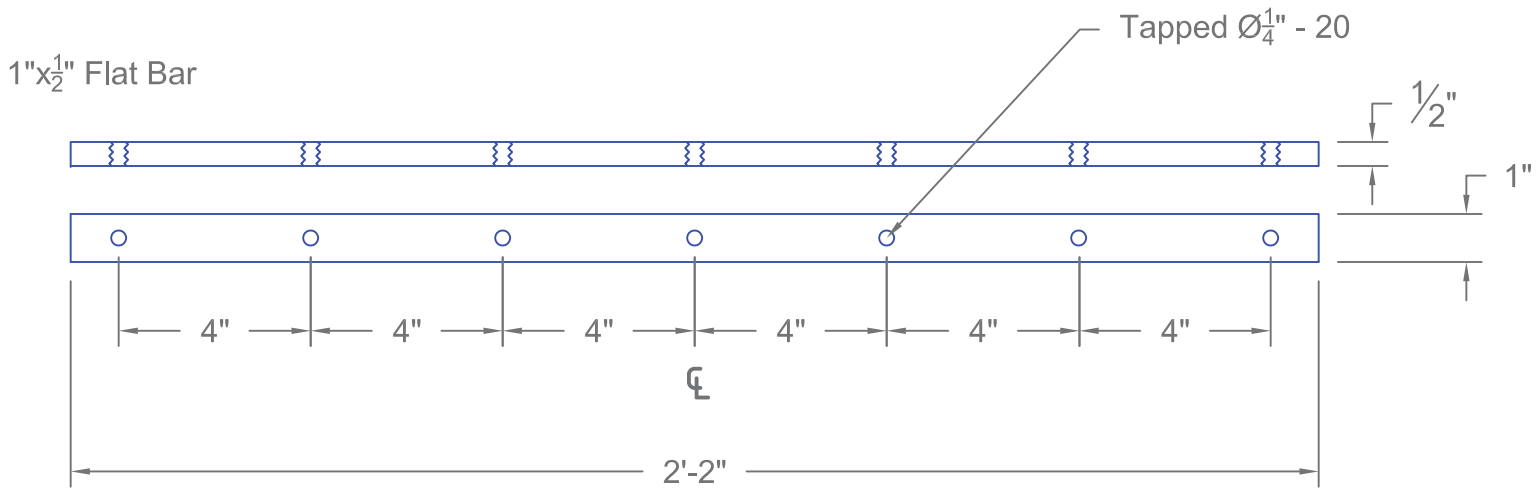

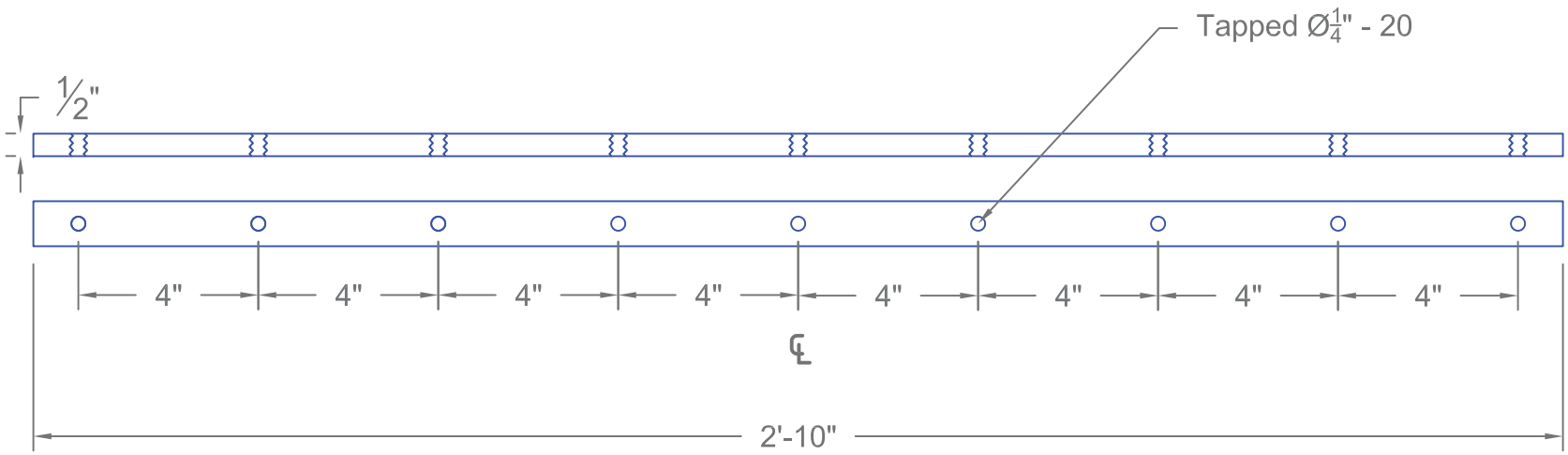

1"x½" Flat Bar

Notes:
1. Bolt holes [round] shall be drilled

2. Tolerances:
   2.1. length (+/-1/16")
   2.2. round hole placement (+/-1/64")

United States Department of State
Bureau of Diplomatic Security
DS/PSD/RD
SA-14, 10th Floor
1400 Wilson Blvd.
Arlington, VA 20520

Project: MGT52_v4	Window Assembly Opening
25Oct2013	
scale: 3" to 12"	

Unclassifed **Quantity 2 Each**

Unclassifed

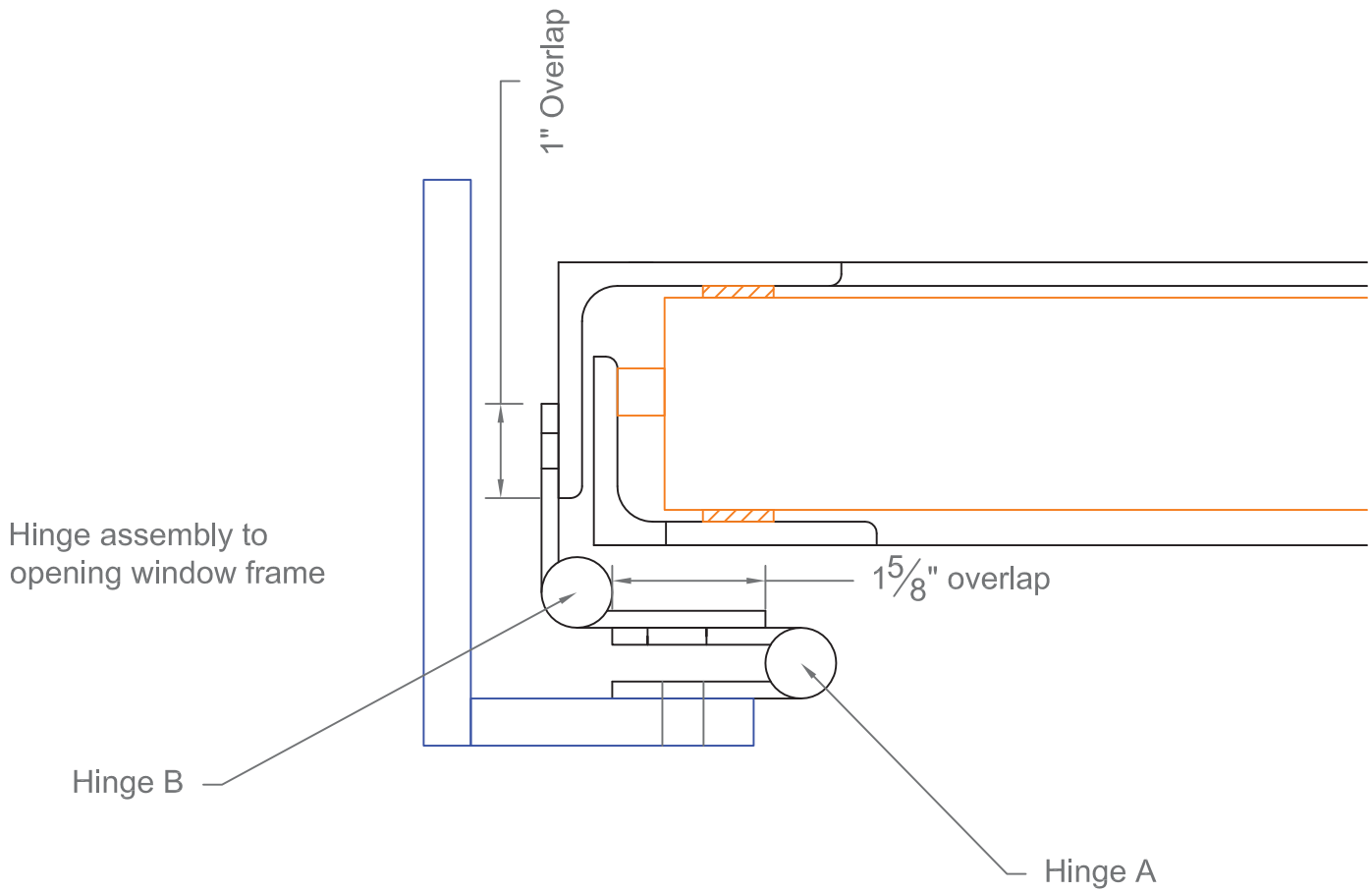

Notes:

1. Bolt holes [round] shall be drilled

2. Tolerances:
   - 2.1. length (+/-$\frac{1}{16}$")
   - 2.2. round hole placement (+/-$\frac{1}{32}$")

United States Department of State
Bureau of Diplomatic Security
DS/PSD/RD
SA-14, 10th Floor
1400 Wilson Blvd.
Arlington, VA 20520

Project: MGT52_v4	Window Assembly Opening
29Oct2013	
scale: 6" to 12"	

Parts for Back Panel Window frame

Unclassifed

Notes:
1. Bolt holes [round] shall be drilled/punched

2. Tolerances:
   2.1. length (+/-$\frac{1}{16}$")
   2.2. round hole placement (+/-$\frac{1}{32}$")

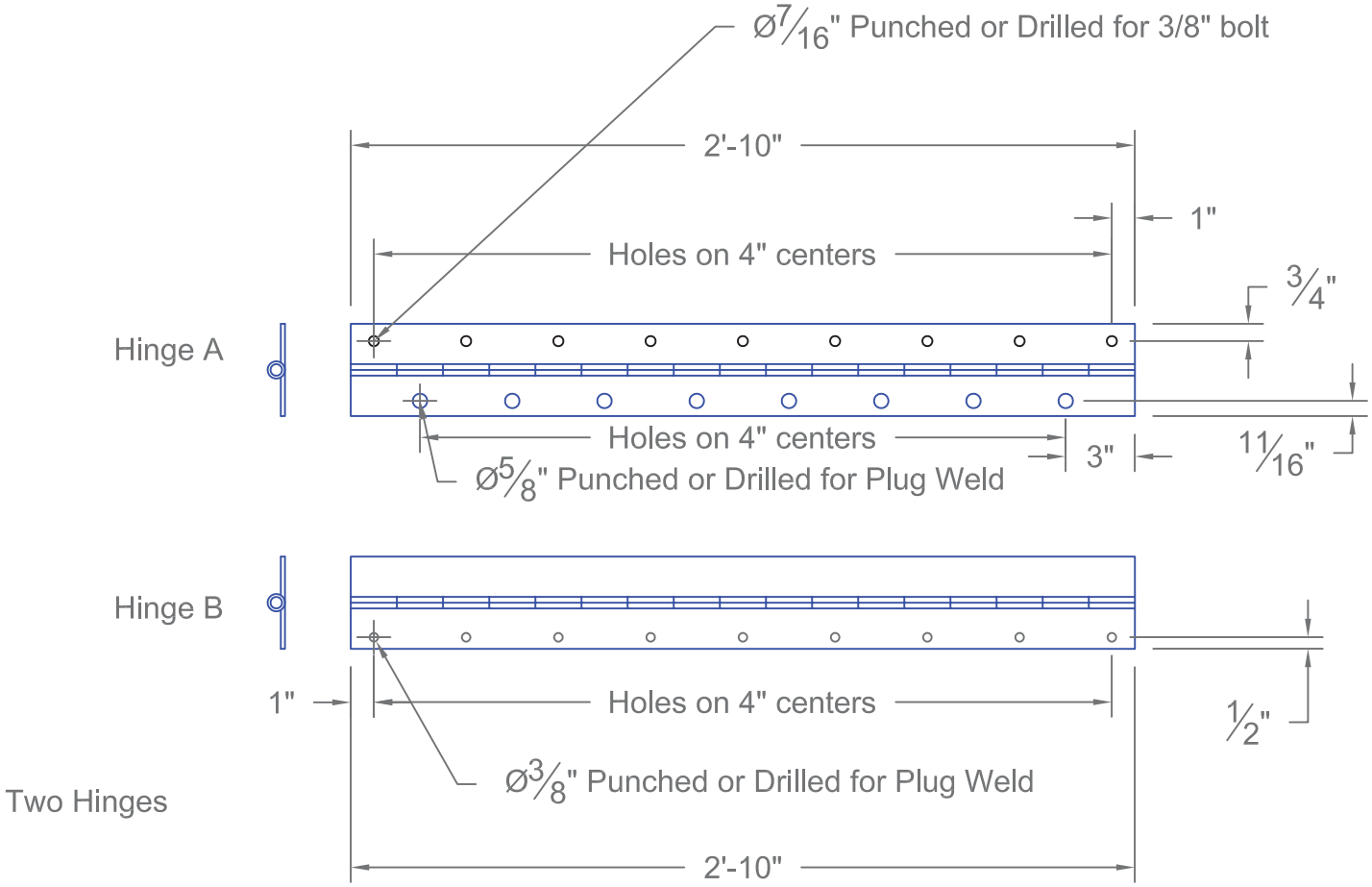

United States Department of State
Bureau of Diplomatic Security
DS/PSD/RD
SA-14, 10th Floor
1400 Wilson Blvd.
Arlington, VA 20520

Project: MGT52_v4	Window Assembly Opening
25Oct2013	
scale: 1½" to 12"	

Parts for Back Panel Window frame

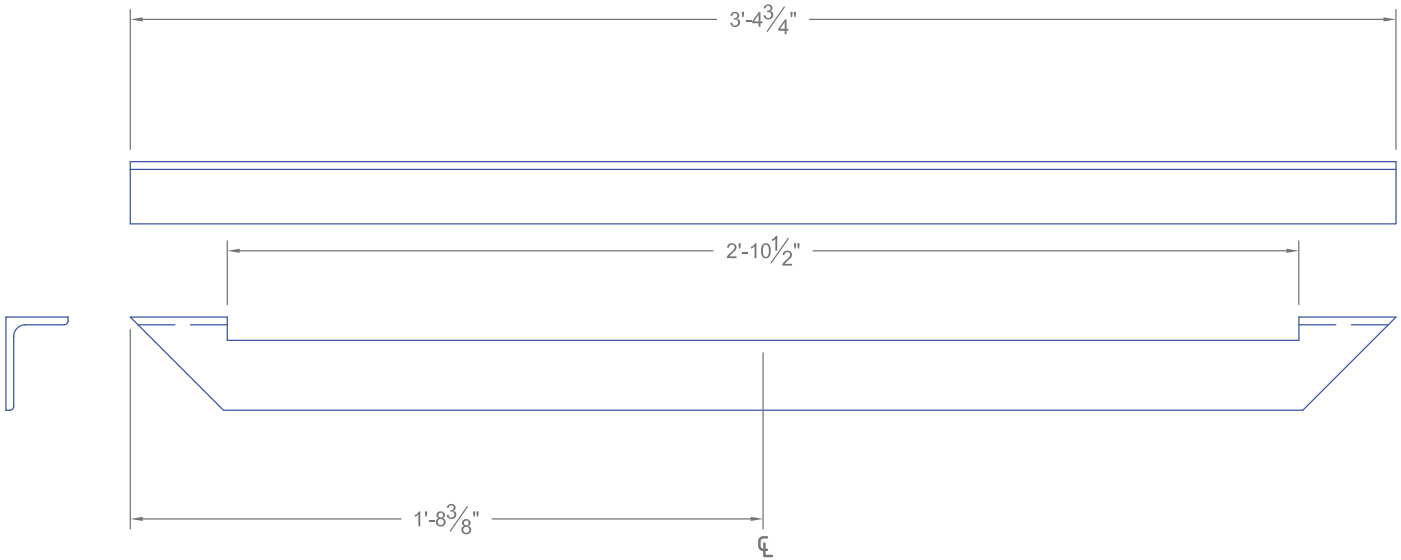

3"x2"x$\frac{1}{4}$" Angle (Material ASTM A36)
Part "back inner window" [Quantity needed 1]

Notes:
1. Bolt holes [round] shall be drilled

2. Tolerances:
   2.1. length (+/-1/32")
   2.2. round hole placement (+/-1/64")

United States Department of State
Bureau of Diplomatic Security
DS/ PSP/ RP
SA-16, 10th Floor
1800 Wilson Blvd.
Arlington, VA 20520

Project WO15-__4	Window Assembly Opening
250x2018	
scale: 1" = 1'-0"	

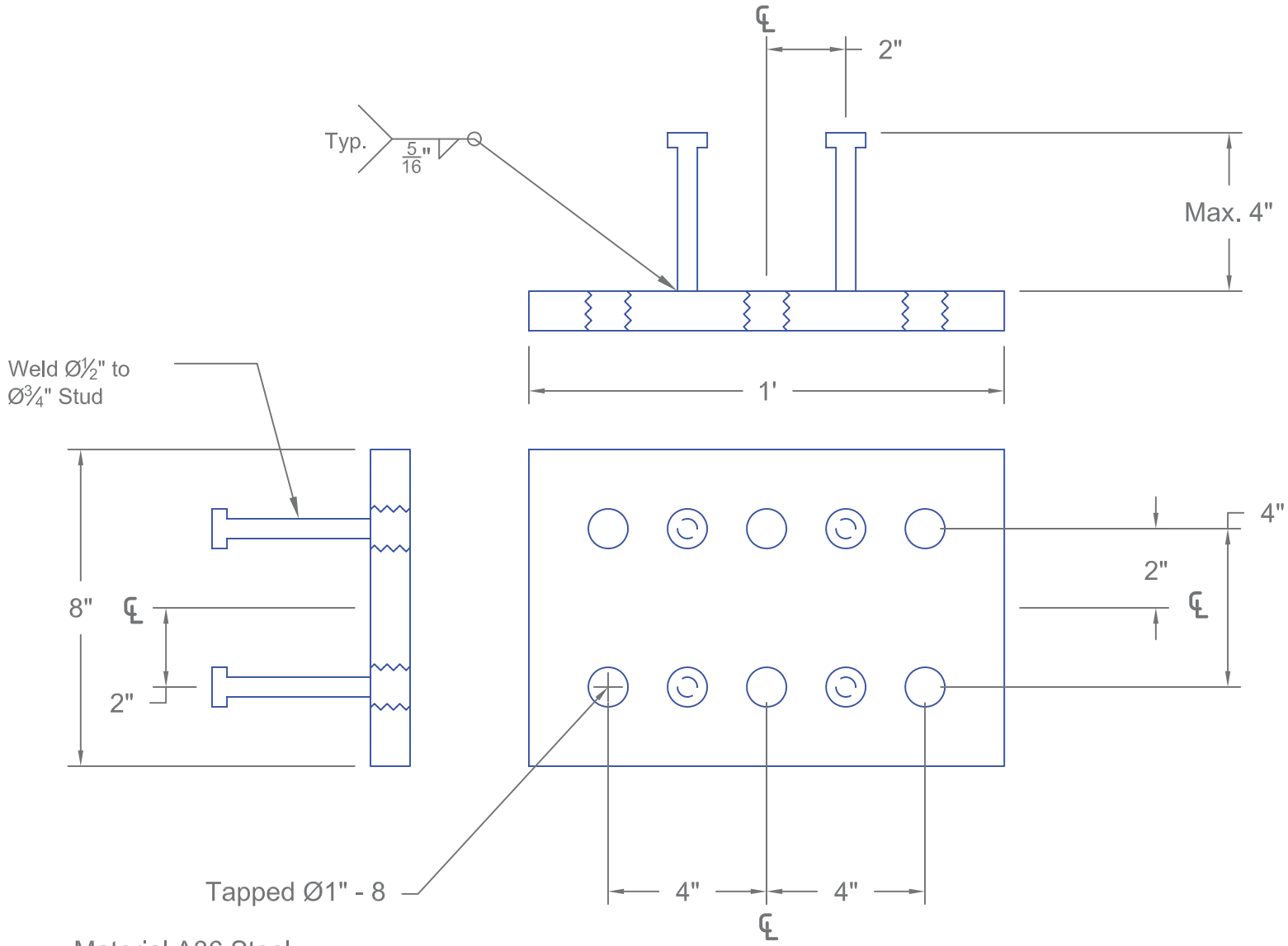

Material A36 Steel

Embed Detail A
Quantity 4

Notes:
1. Bolt holes [round] shall be drilled
2. Tolerances:
   2.1. length (+/-$\frac{1}{16}$")
   2.2. round hole placement (+/-$\frac{1}{32}$")

United States Department of State
Bureau of Diplomatic Security
DS/PSD/RD
SA-14, 10th Floor
1400 Wilson Blvd.
Arlington, VA 20520

Project:MGTS2_v4	
06Jun2013	
Scale: N.T.S	

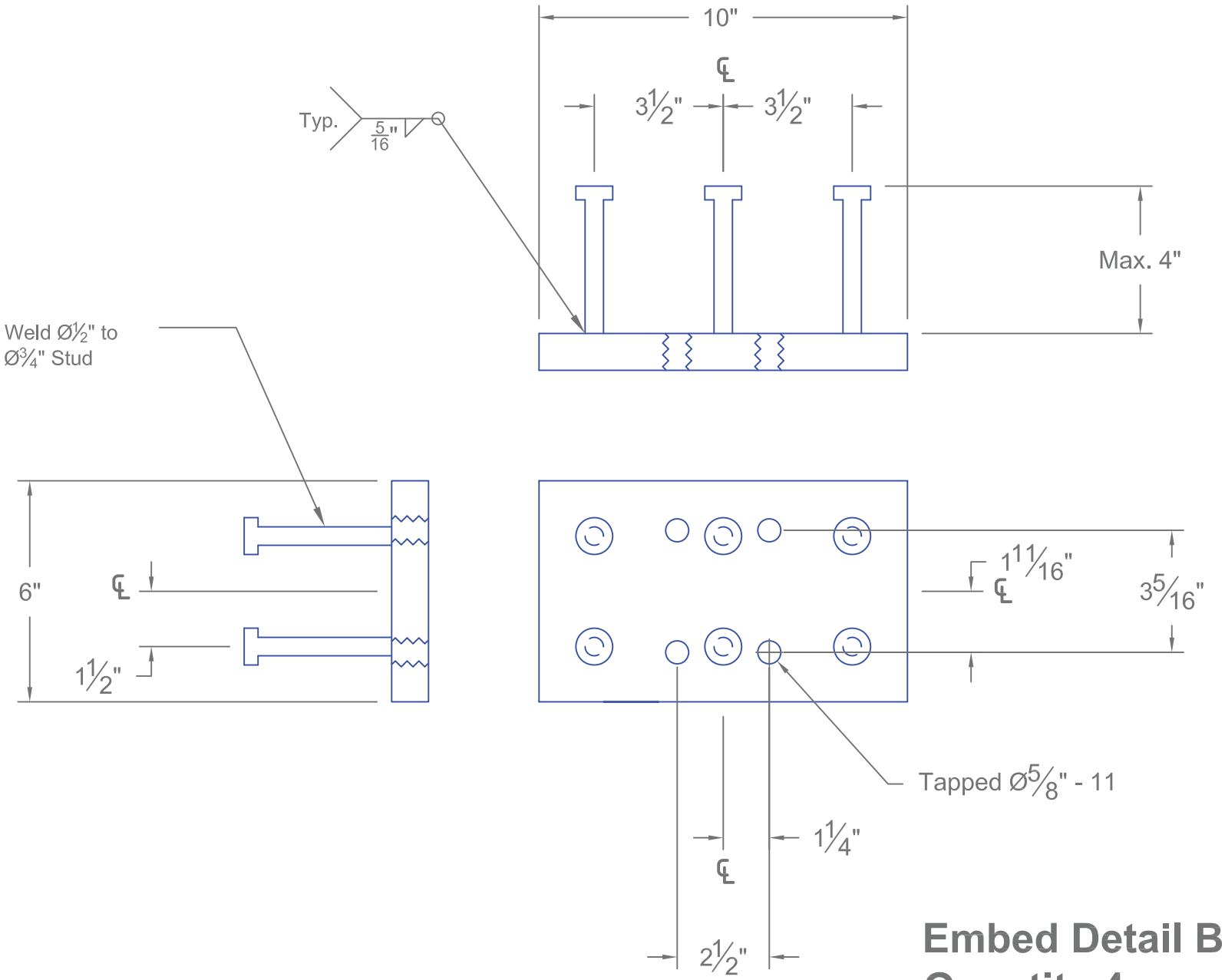

A36 Steel embeds.

Embed Detail B
Quantity 4

Notes:
1. Bolt holes [round] shall be drilled

2. Tolerances:
   2.1. length (+/-$\frac{1}{16}$")
   2.2. round hole placement (+/-$\frac{1}{32}$")

United States Department of State
Bureau of Diplomatic Security
DS/PSD/RD
SA-14, 10th Floor
1400 Wilson Blvd.
Arlington, VA 20520

Project: MGT52_v4
06 Jun 2019
Scale: N.T.S

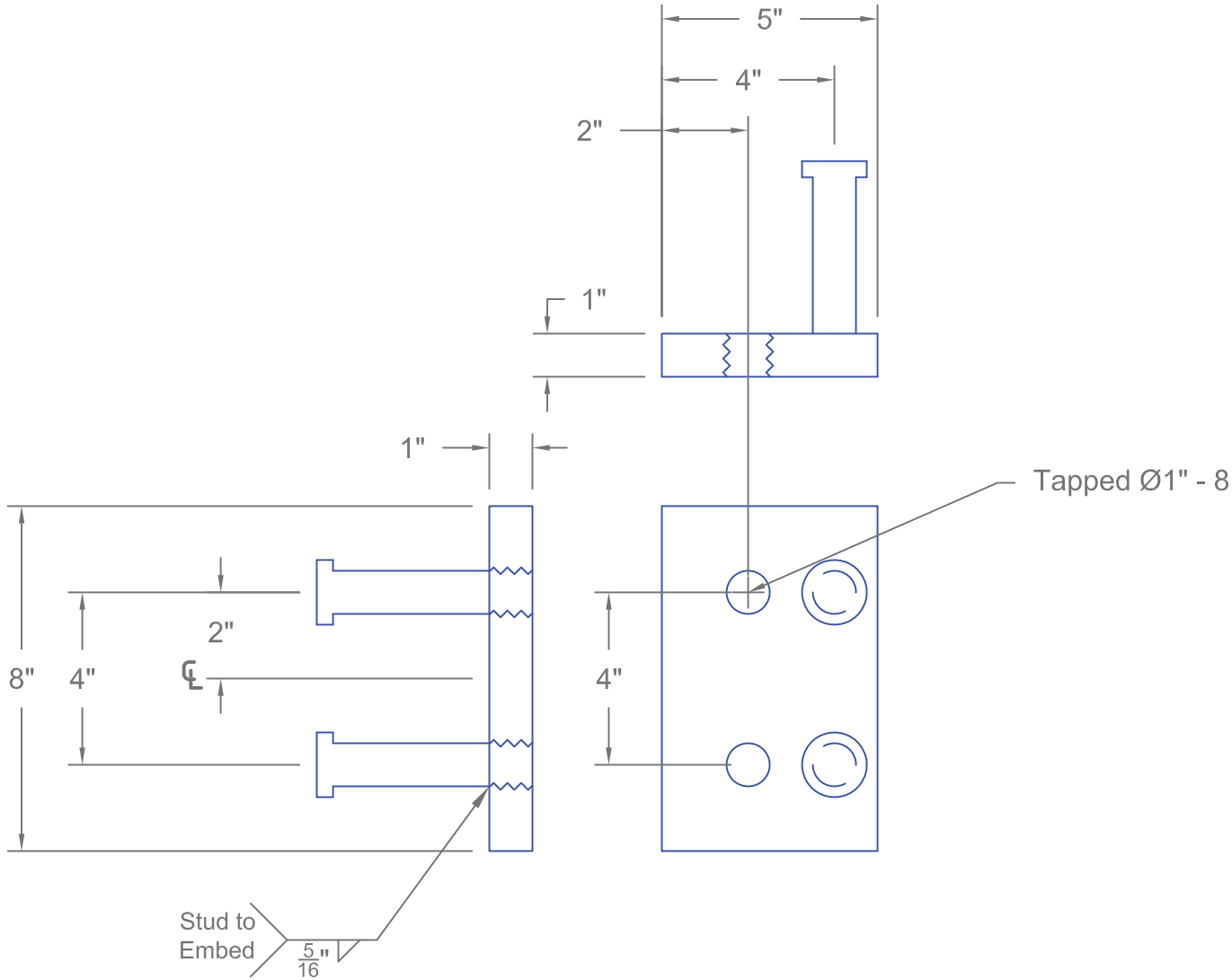

Embed Detail C
Quantity 2

A36 Steel embeds.

Notes:
1. Bolt holes [round] shall be drilled

2. Tolerances:
   2.1. length (+/-$\frac{1}{16}$")
   2.2. round hole placement (+/-$\frac{1}{32}$")

United States Department of State
Bureau of Diplomatic Security
DS/PSD/RD
SA-14, 10th Floor
1400 Wilson Blvd.
Arlington, VA 20520

Project:MGTS2_v4	
06Jun2013	
Scale: N.T.S	

"Front Panel(s)" [Quantity 2]

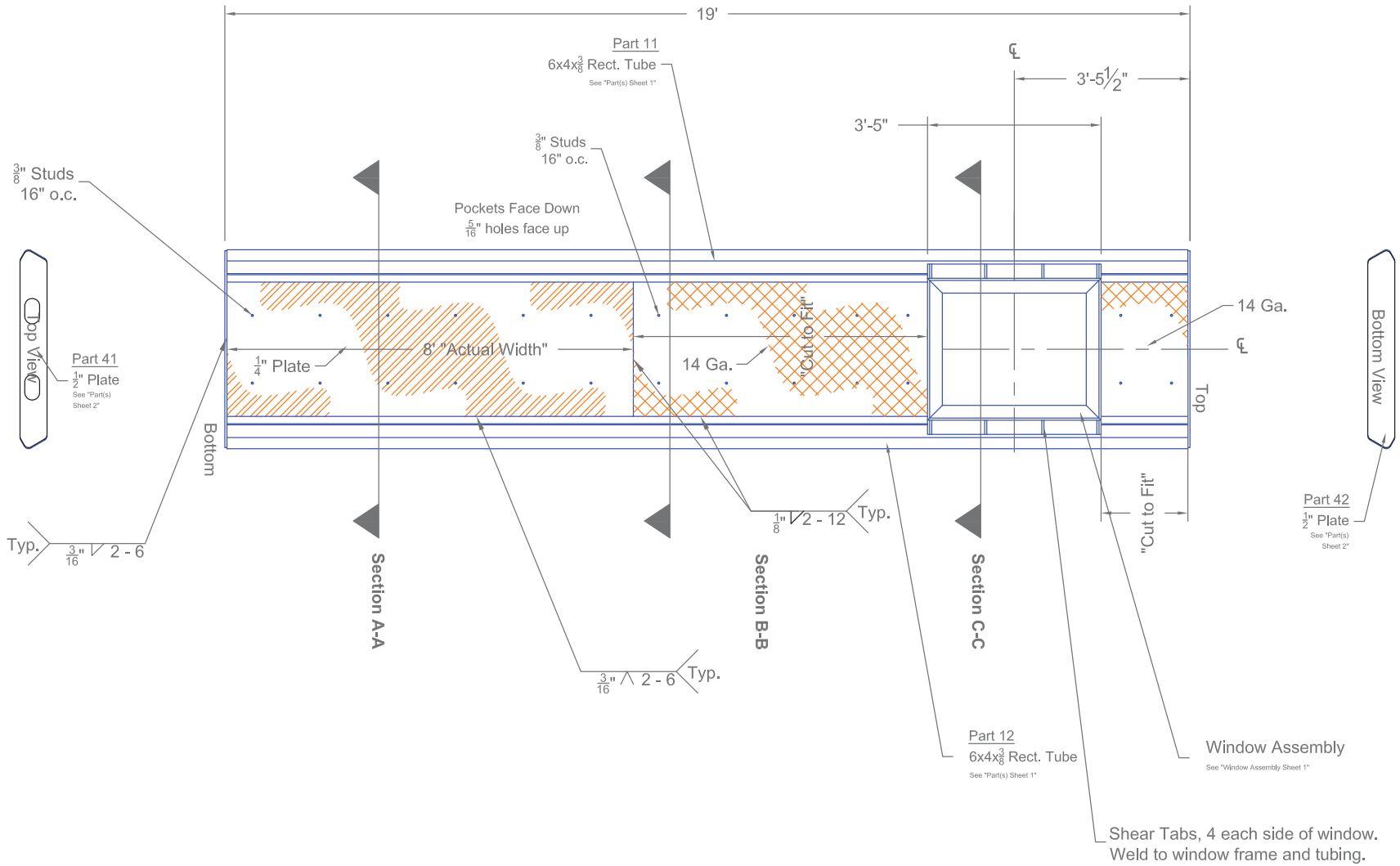

Notes:

1. Weld 3/8" studs (nelson stud part # 101053043) to the 14 Ga. and 1/4" spall liners. Spacing @ 16" o.c. each way, minimum four studs per sheet

United States Department of State
Bureau of Diplomatic Security
DS/PSD/RD
SA-14, 10th Floor
1400 Wilson Blvd.
Arlington, VA 20520

ProjectMGTS2_v4	Front Panel
06Jun2013	Sheet 1 of 3
Scale: 1/4" to 12"	

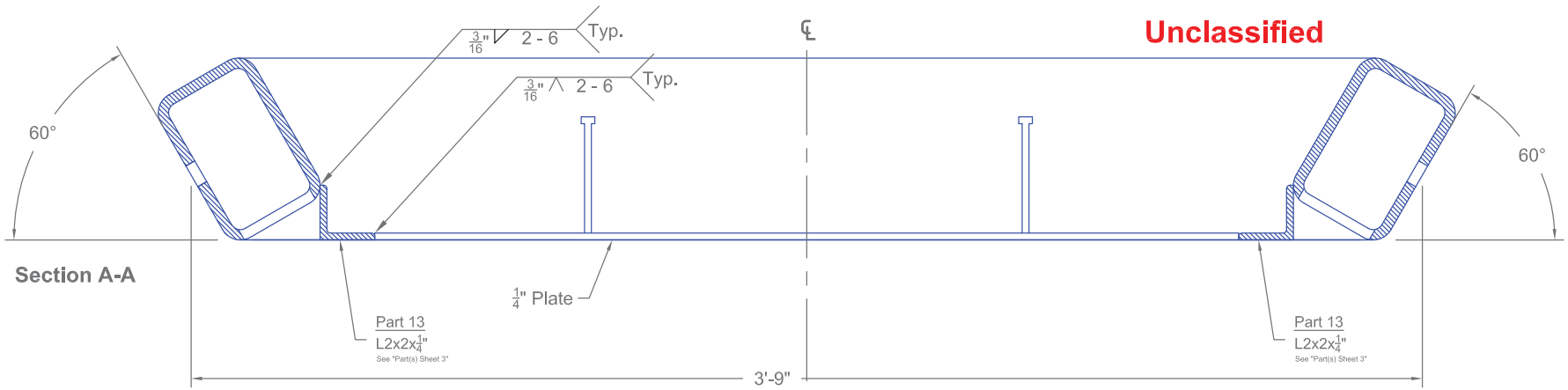

Scale 3" = 1'

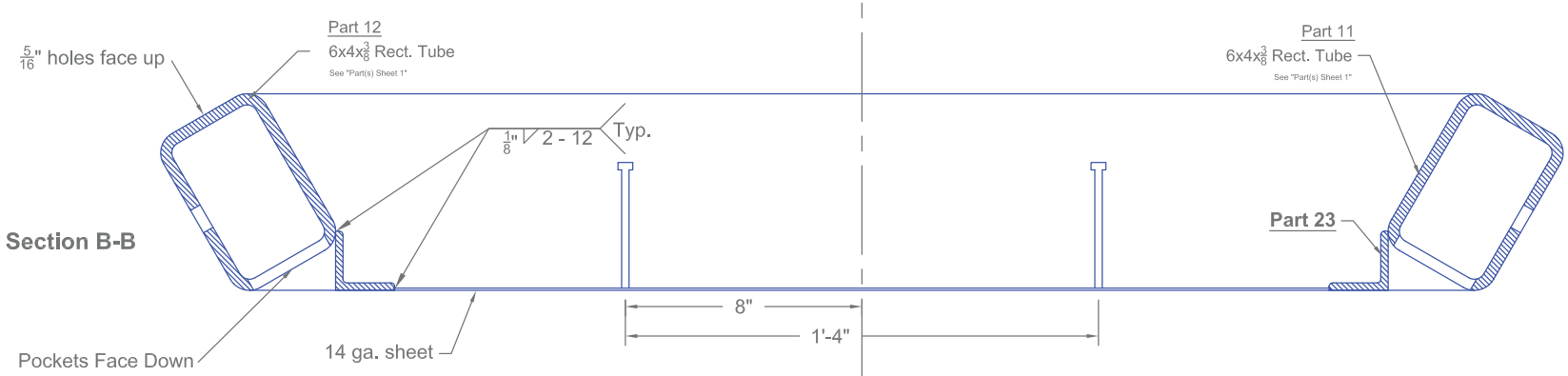

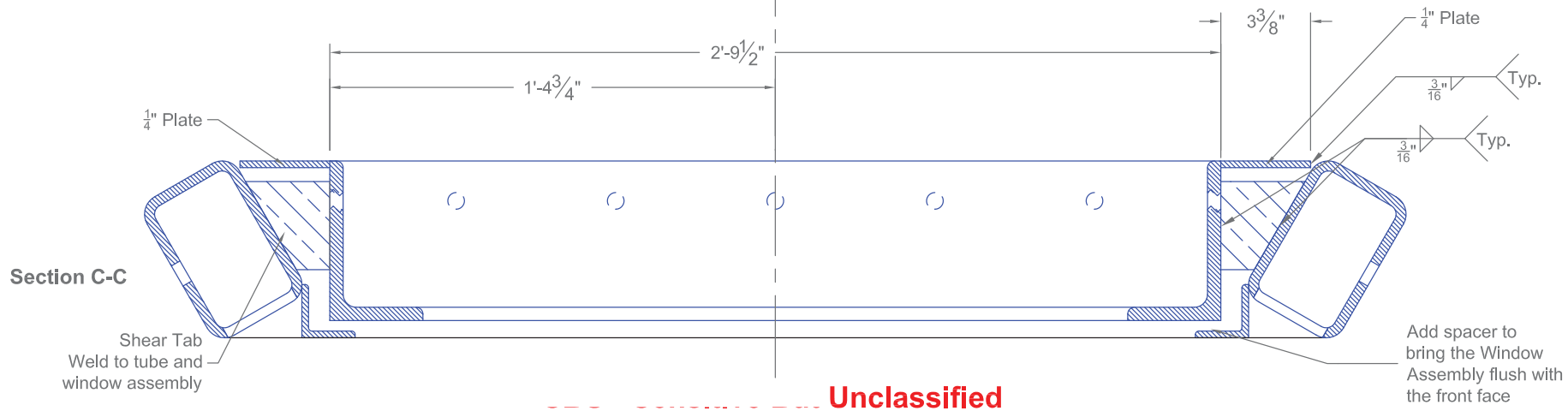

Notes:

1. Weld 3/8" studs (nelson stud part # 101053043) to the 14 Ga. and 1/4" spall liners. Spacing @ 16" o.c. each way, minimum four studs per sheet

United States Department of State
Bureau of Diplomatic Security
DS/PSD/RD
SA-14, 10th Floor
1400 Wilson Blvd.
Arlington, VA 20520

ProjectMGTS2_v4	Front Panel
06Jun2013	Sheet 2 of 3
scale: 3" to 12"	

"Front Panel with A706 Rebar"

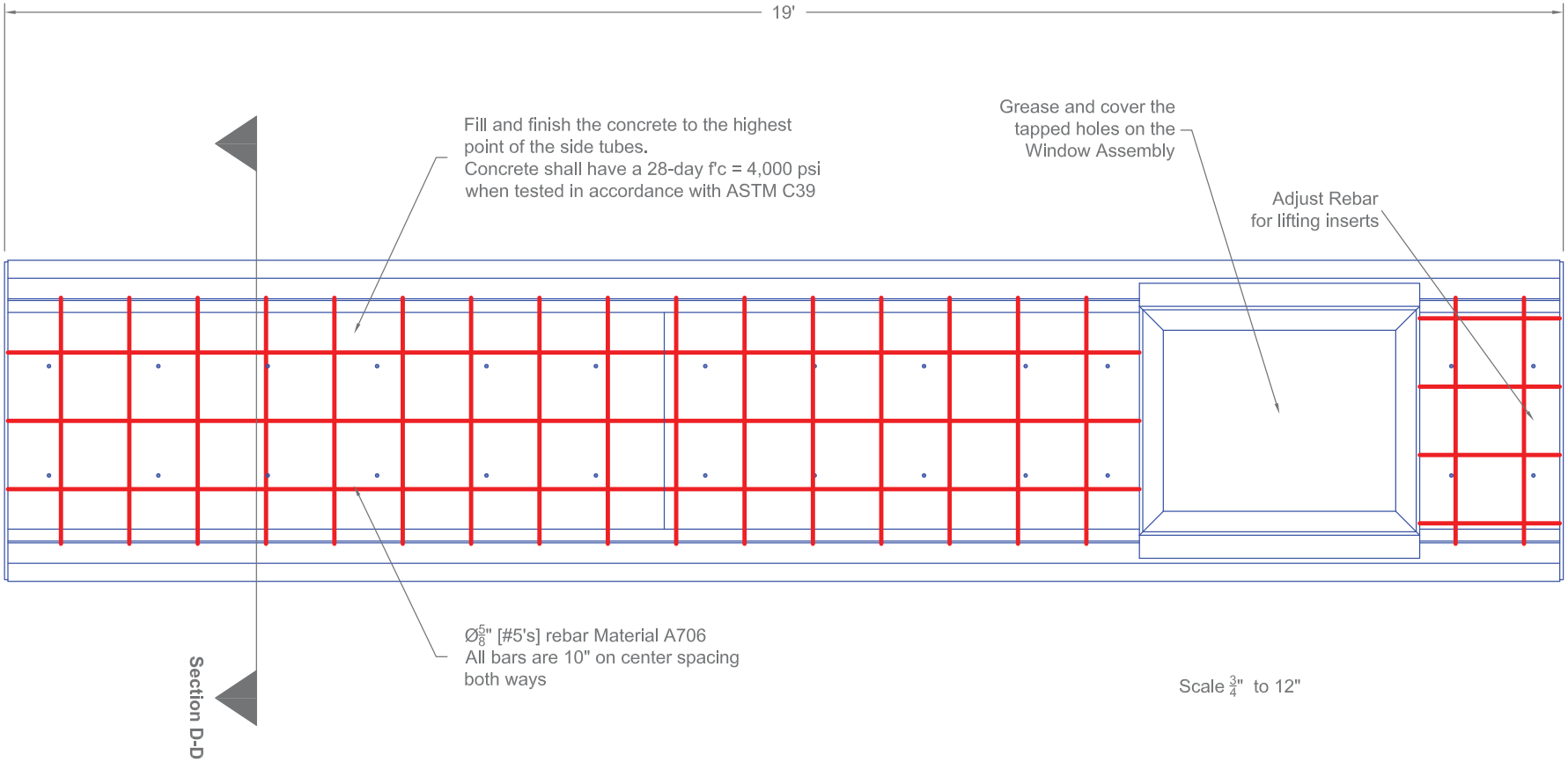

Scale $\frac{3}{4}$" to 12"

Section D-D

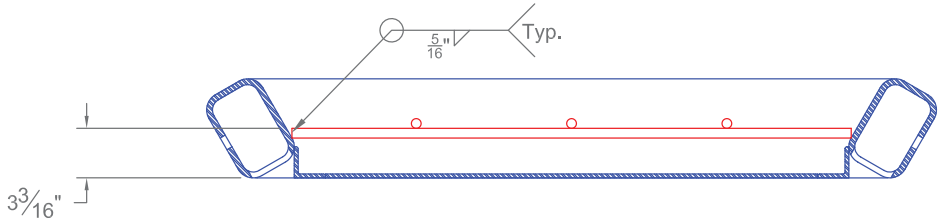

Scale $1\frac{1}{2}$" to 12"

United States Department of State
Bureau of Diplomatic Security
DS/PSD/RD
SA-14, 10th Floor
1400 Wilson Blvd.
Arlington, VA 20520

ProjectMGTS2_v4	Front Panel
06Jun2013	Sheet 3 of 3
scale: See Each View	

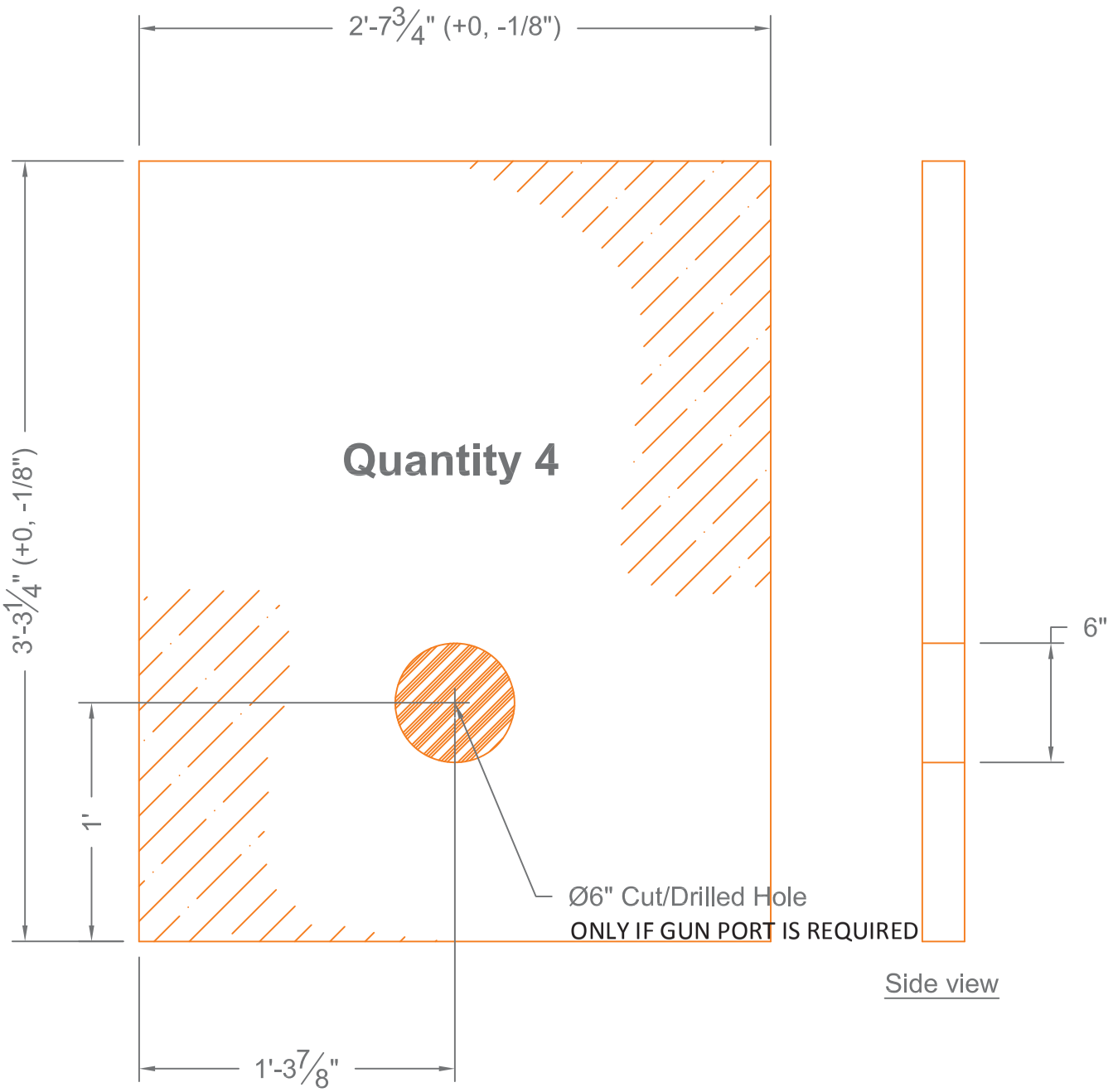

Notes:

1. Thickness shall be determined by the vendor

2. Lay-up shall meet or exceed the National Institute of Justice (NIJ) Level IV

3. Lay-up shall be made glass-cald polycarbonate

United States Department of State
Bureau of Diplomatic Security
DS/PSD/RD
SA-14, 10th Floor
1400 Wilson Blvd.
Arlington, VA 20520

Project:MGTS2_v4	Glazing
06Jun2013	Sheet 1 of 2
scale: N.T.S	

Side view

NO Hole

Notes:

1. Thickness shall be determined by the vendor

2. Lay-up shall meet or exceed the National Institute of Justice (NIJ) Level IV

3. Lay-up shall be made glass-cald polycarbonate

United States Department of State
Bureau of Diplomatic Security
DS/PSD/RD
SA-14, 10th Floor
1400 Wilson Blvd.
Arlington, VA 20520

Project:MGTS2_v4	Glazing Sheet 2 of 2
06Jun2013	
scale: N.T.S	

"Left Panel" [Quantity 1]

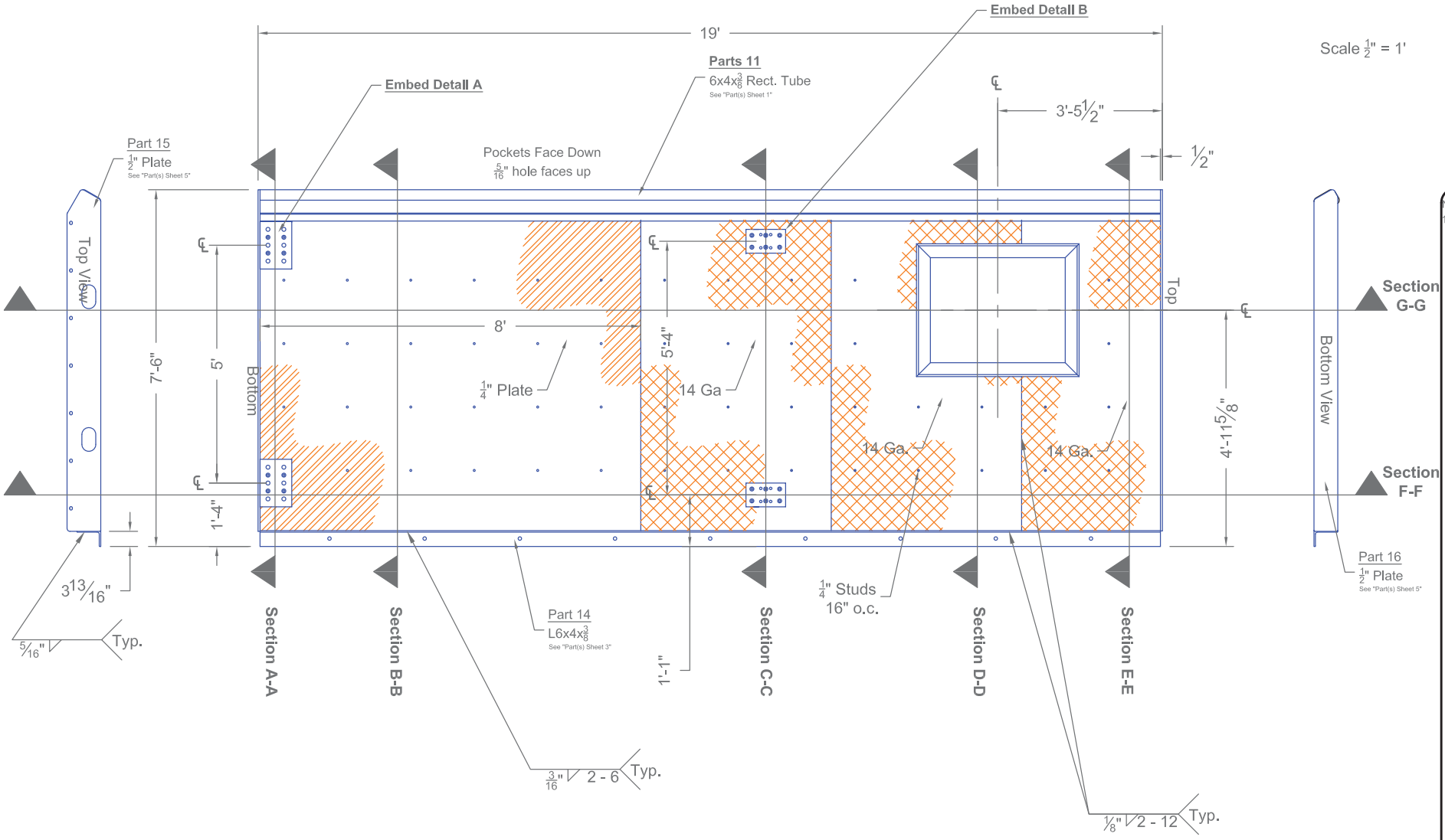

Notes:

1. Weld 3/8" studs (nelson stud part # 101053043) to the 14 Ga. and 1/4" spall liners. Spacing @ 16" o.c. each way, minimum four studs per sheet

United States Department of State
Bureau of Diplomatic Security
DS/PSD/RD
SA-14, 10th Floor
1400 Wilson Blvd.
Arlington, VA 20520

ProjectMGTS2_v4	Left Panel
06Jun2013	Sheet 1 of 4
Scale: 1/2" to 12"	

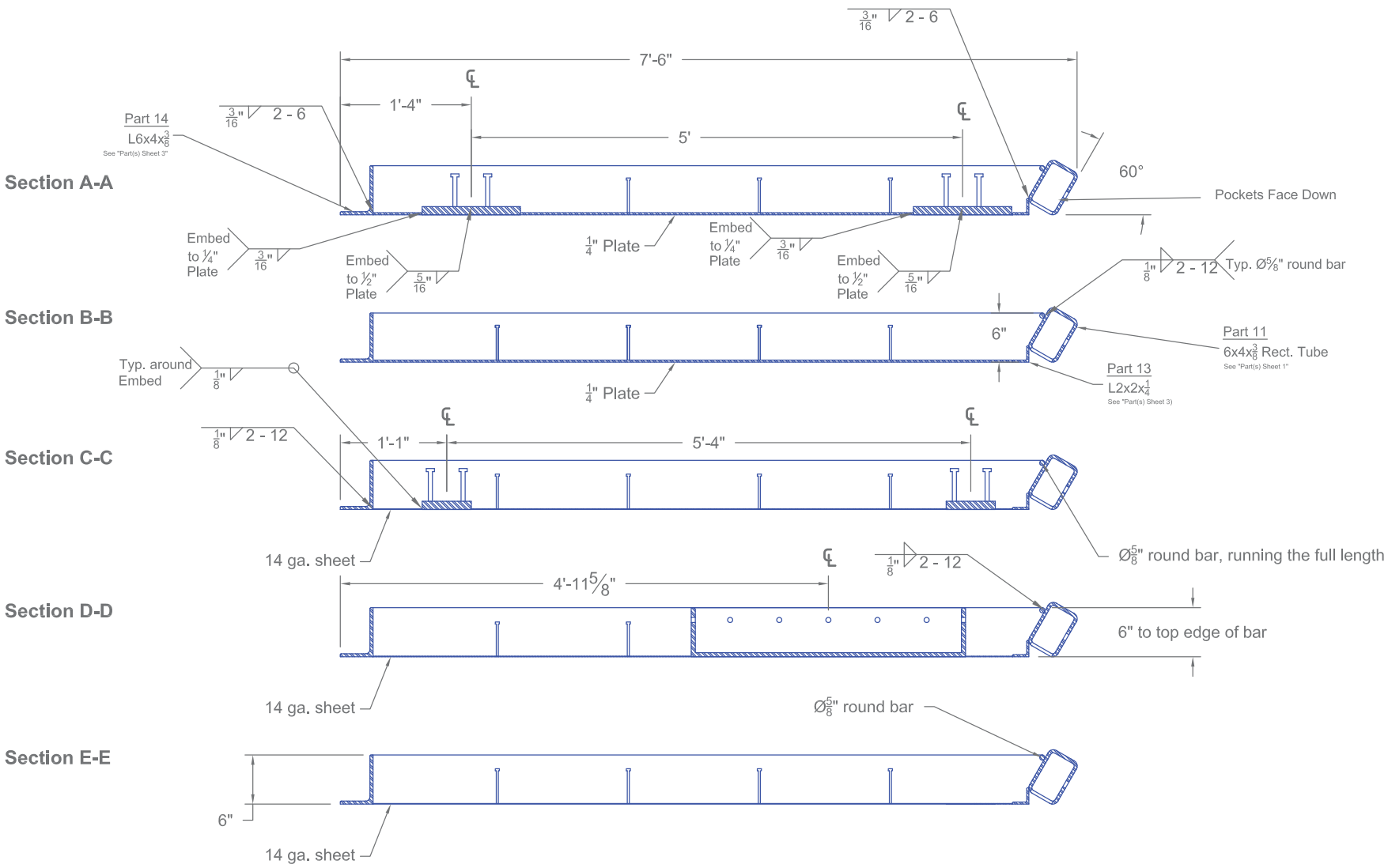

Notes:

1. Weld 3/8" studs (nelson stud part # 101053043) to the 14 Ga. and 1/4" spall liners. Spacing @ 16" o.c. each way, minimum four studs per sheet

United States Department of State
Bureau of Diplomatic Security
DS/PSD/RD
SA-14, 10th Floor
1400 Wilson Blvd.
Arlington, VA 20520

ProjectMGTS2_v4	Left Panel
06Jun2013	Sheet 2 of 4
Scale: 1" to 12"	

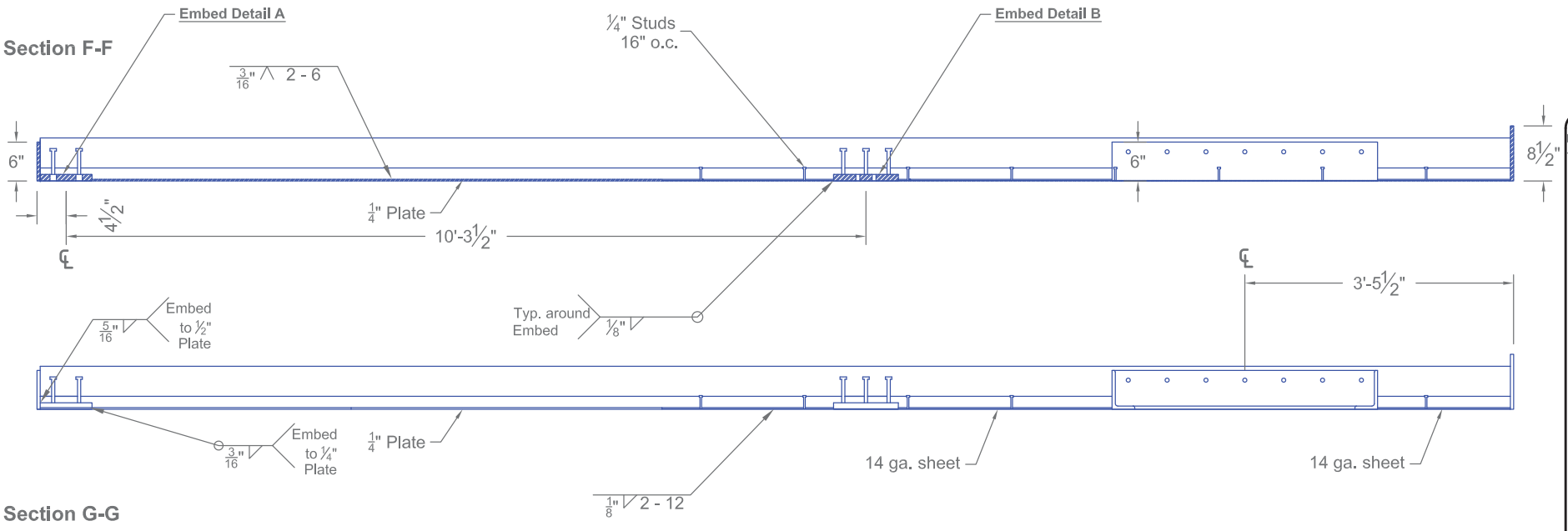

Notes:

1. Weld 3/8" studs (nelson stud part # 101053043) to the 14 Ga. and 1/4" spall liners. Spacing @ 16" o.c. each way, minimum four studs per sheet

United States Department of State
Bureau of Diplomatic Security
DS/PSD/RD
SA-14, 10th Floor
1400 Wilson Blvd.
Arlington, VA 20520

ProjectMGTS2_v4	Left Panel
06Jun2013	Sheet 3 of 4
Scale: 1" to 12"	

"Left Panel with A706 Rebar"

Add and weld bar(s) as needed to support Embed B for handling

Grease and cover the tapped holes on the Window Assembly

Adjust Rebar for lifting inserts

Add 16" rebars between 10" c-c spaced bars for addition shear support

Section H-H

Fill and finish the concrete to the height of the 6" Angle Leg/Round Bar or ~6-inches. Concrete shall have a 28-day f'c = 4,000 psi when tested in accordance with ASTM C39

Ø$\frac{5}{8}$" [#5's] rebar Material A706
All bars are 10" on center spacing both ways

Typ. $\frac{5}{16}$"

Section H-H

Typ. $\frac{5}{16}$"

Adjust Rebar for lifting inserts

Typ. $\frac{5}{16}$"

3"

6"

United States Department of State
Bureau of Diplomatic Security
DS/PSD/RD
SA-14, 10th Floor
1400 Wilson Blvd.
Arlington, VA 20520

ProjectMGTS2_v4	Left Panel
06Jun2013	Sheet 4 of 4
Scale: See Each View	

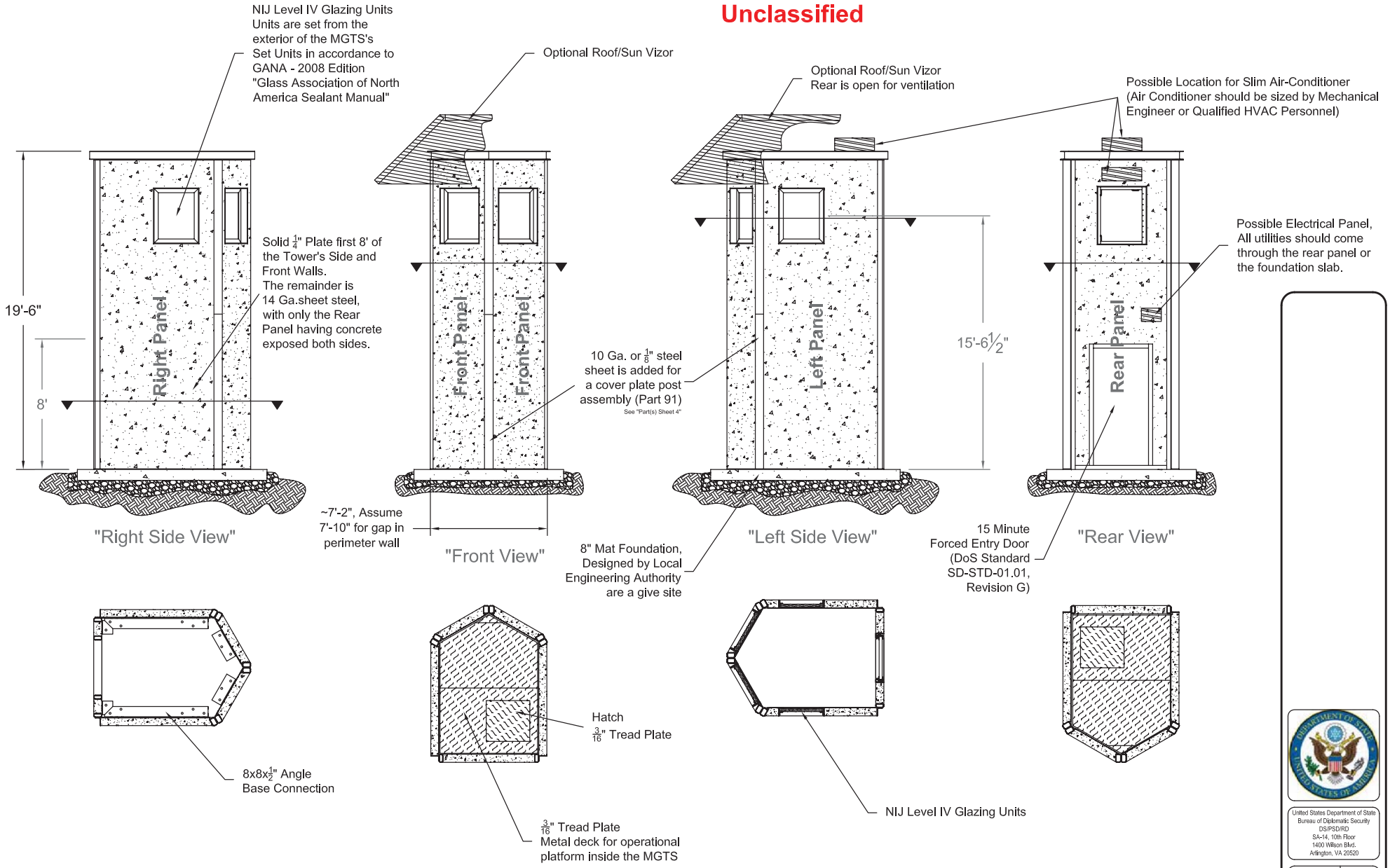

United States Department of State
Bureau of Diplomatic Security
DS/PSD/RD
SA-14, 10th Floor
1400 Wilson Blvd.
Arlington, VA 20520

Project:MGTS2_v4	MGTS
06Jun2013	
Scale: 3/8" to 12"	

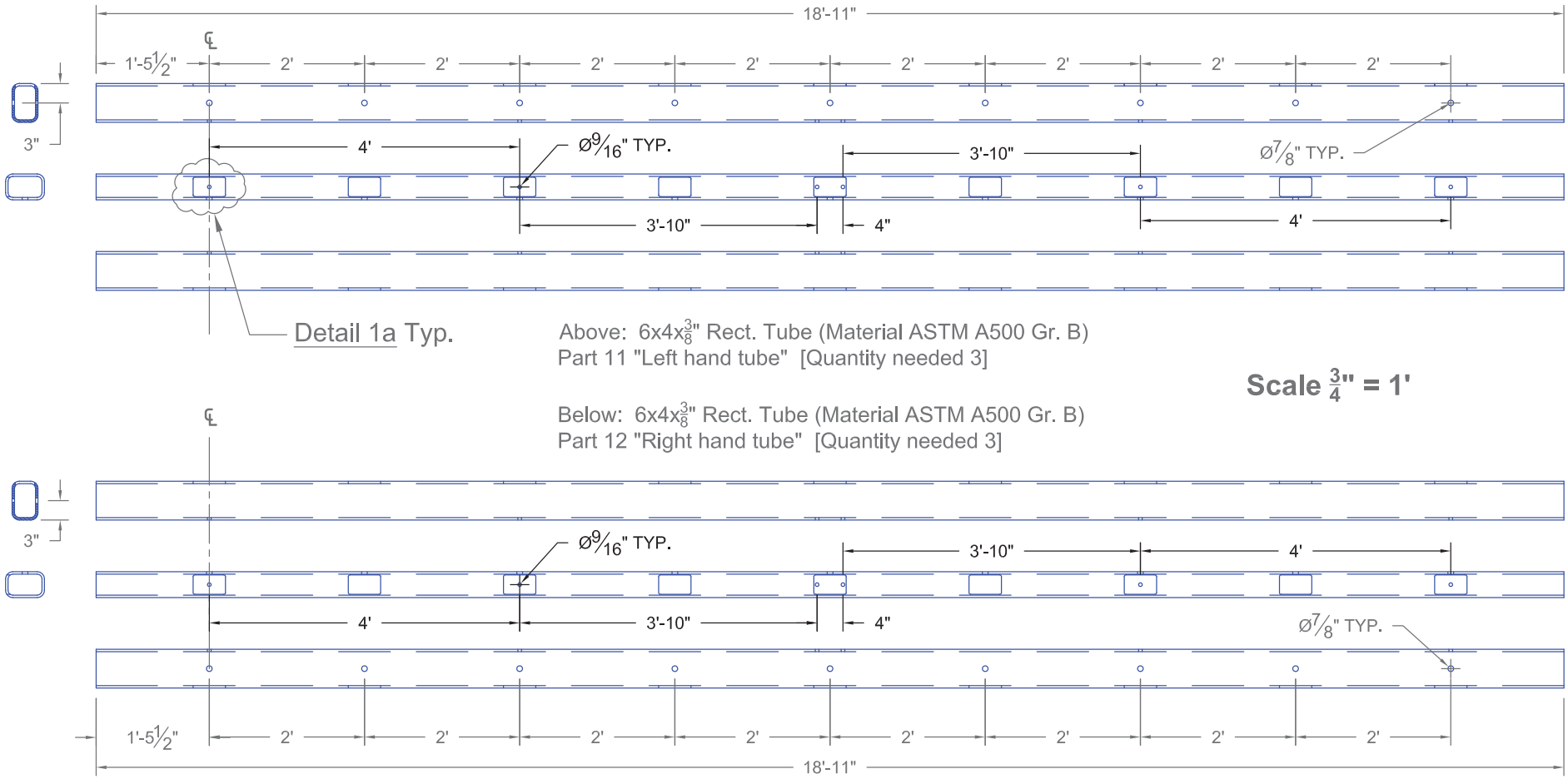

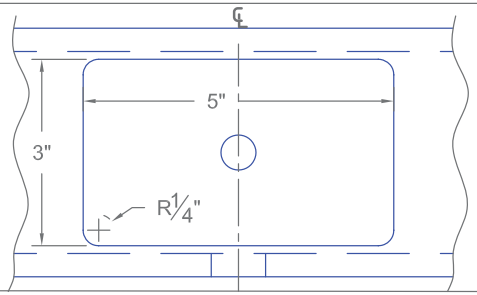

Detail 1a
Scale 6" = 1'

Notes:
1. Bolt holes [round] shall be drilled
2. Access holes [square] shall be cut by plasma torch or best practice to reduce heating the tube
3. Tolerances:
   3.1. length (+/-1/16")
   3.2. round hole placement (+/-1/32")
   3.3. square hole placement (+/-1/4")

United States Department of State
Bureau of Diplomatic Security
DS/PSD/RD
SA-14, 10th Floor
1400 Wilson Blvd.
Arlington, VA 20520

Project:MGTS2_v4	Part(s)
06Jun2013	Sheet 1
scale: See Each View	

Unclassified

Scale 3" = 1'

$\frac{1}{2}$" Plate (Material ASTM A36)
Part 41 "Front Panel Top" [Quantity needed 2]

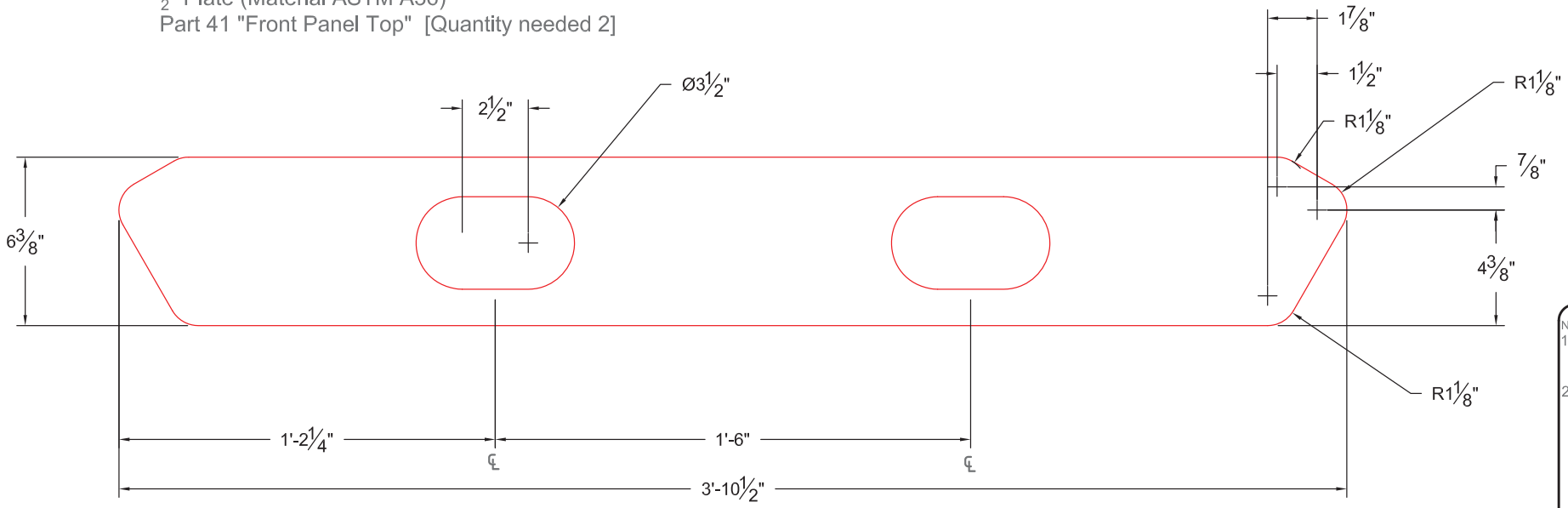

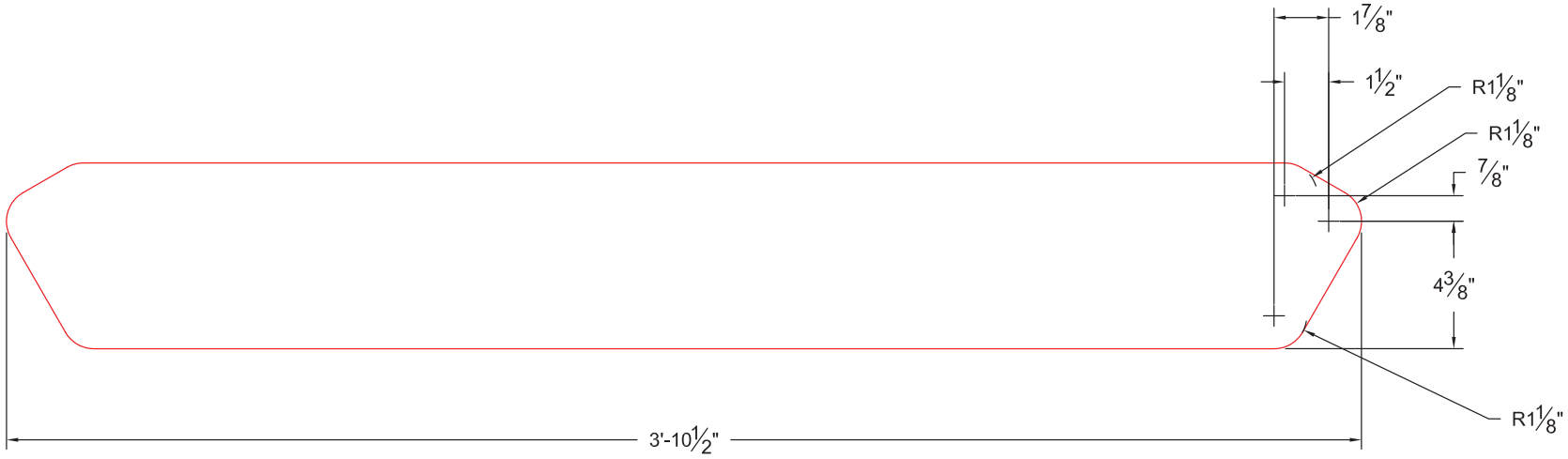

$\frac{1}{2}$" Plate (Material ASTM A36)
Part 42 "Front Panel Bottom" [Quantity needed 2]

Unclassified

Notes:
1. Reference .DXF Files
2. Tolerances:
   2.1. Standard for CNC Plasma Torch

United States Department of State
Bureau of Diplomatic Security
DS/PSD/RD
SA-14, 10th Floor
1400 Wilson Blvd.
Arlington, VA 20520

Project:MGTS2_v4	Part(s) Sheet 2
06Jun2013	
Scale: See Each View	

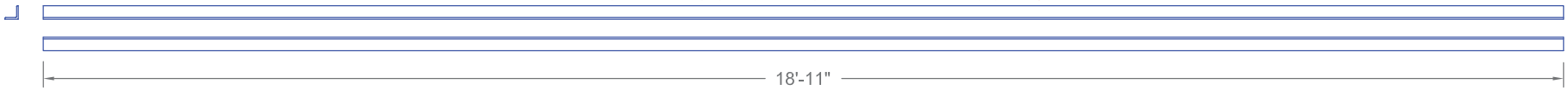

Above: 2x2x$\frac{1}{4}$" Angle (Material ASTM A36)
Part 13 [Quantity needed 6]

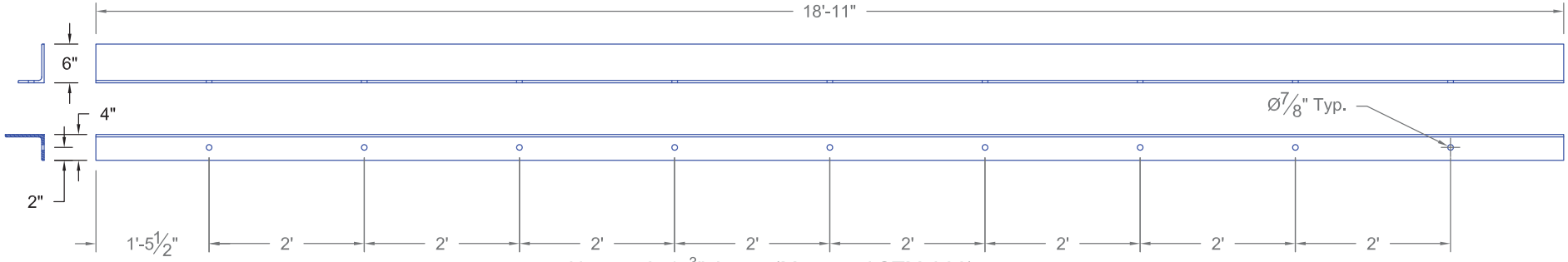

Above: 6x4x$\frac{3}{8}$" Angle (Material ASTM A36)
Part 14 [Quantity needed 2]

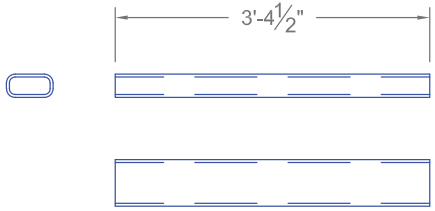

Above: 6x3x$\frac{3}{8}$" Rect. Tube (Material ASTM A500 Gr. B)
Part 23 "Top Door Jam" [Quantity needed 1]

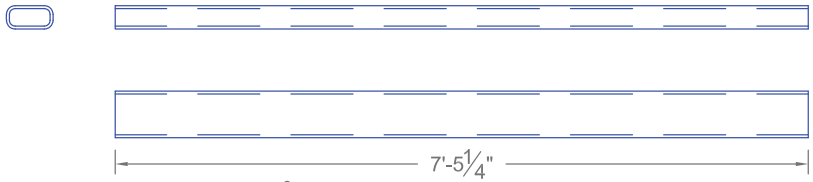

Above: 6x3x$\frac{3}{8}$" Rect. Tube (Material ASTM A500 Gr. B)
Part 24 "Door Jam" [Quantity needed 2]

Notes:
1. Bolt holes [round] shall be drilled

2. Tolerances:
2.1. length (+/-$\frac{1}{16}$")
2.2. round hole placement (+/-$\frac{1}{32}$")

United States Department of State
Bureau of Diplomatic Security
DS/PSD/RD
SA-14, 10th Floor
1400 Wilson Blvd.
Arlington, VA 20520

ProjectMGTS2_v4	Part(s)
06Jun2013	Sheet 3
Scale: 2" to 12"	

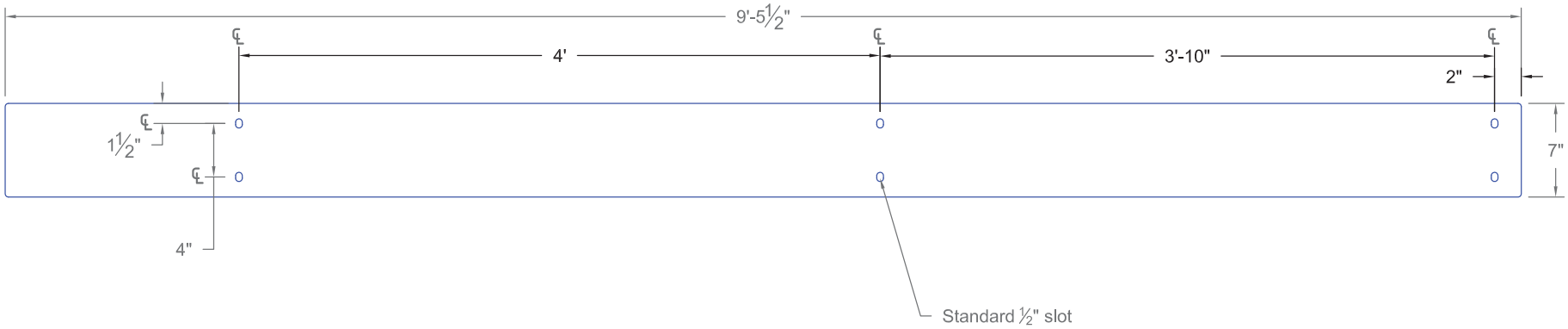

10 Ga. Sheet (Material ASTM A36)
Part 91 "Cover Plate" [Quantity needed 6]

Notes:
1. Bolt holes [slotted] shall be punched
2. Tolerances:
   2.1. length (+/-$\frac{1}{16}$")
   2.2. Slotted hole placement (+/-$\frac{1}{32}$")

United States Department of State
Bureau of Diplomatic Security
DS/PSD/RD
SA-14, 10th Floor
1400 Wilson Blvd.
Arlington, VA 20520

ProjectMGTS2_v4	Part(s)
06Jun2013	Sheet 4
Scale: 1 $\frac{1}{2}$" to 12"	

$\frac{1}{2}$" Plate (Material ASTM A36)
Part 15 "Side Panel Tops" [Quantity 2]

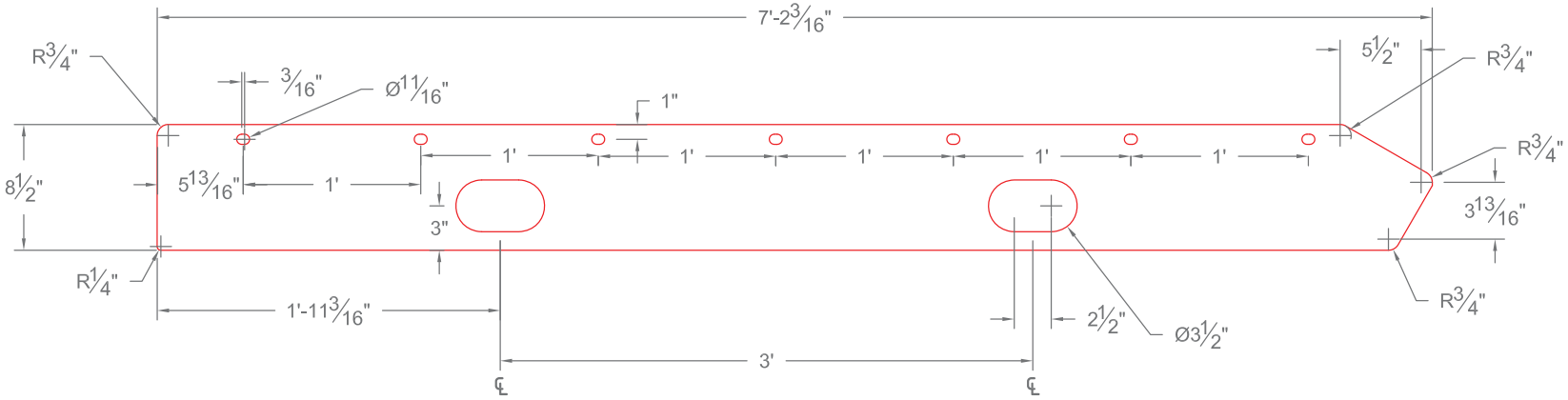

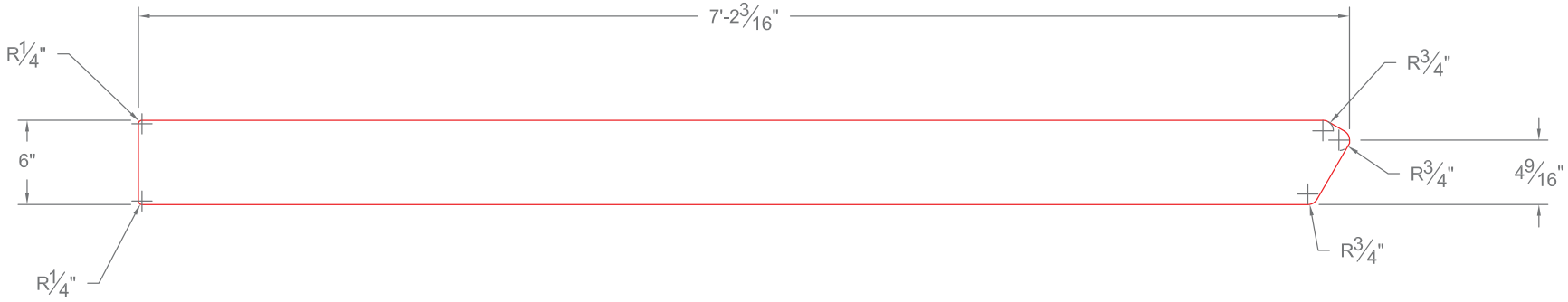

$\frac{1}{2}$" Plate (Material ASTM A36)
Part 16 "Side Panel Bottom" [Quantity 2]

Notes:
1. Reference .DXF Files
2. Standard Slot for a Ø$\frac{5}{8}$" bolt.
3. Tolerances:
   3.1. Standard for CNC Plasma Torch

United States Department of State
Bureau of Diplomatic Security
DS/PSD/RD
SA-14, 10th Floor
1400 Wilson Blvd.
Arlington, VA 20520

ProjectMGTS2_v4	Part(s)
06Jun2013	Sheet 5
Scale: $\frac{1}{4}$" to 12"	

W6x15 Beam (Material A992)
Part 61 [Quantity Needed 1]

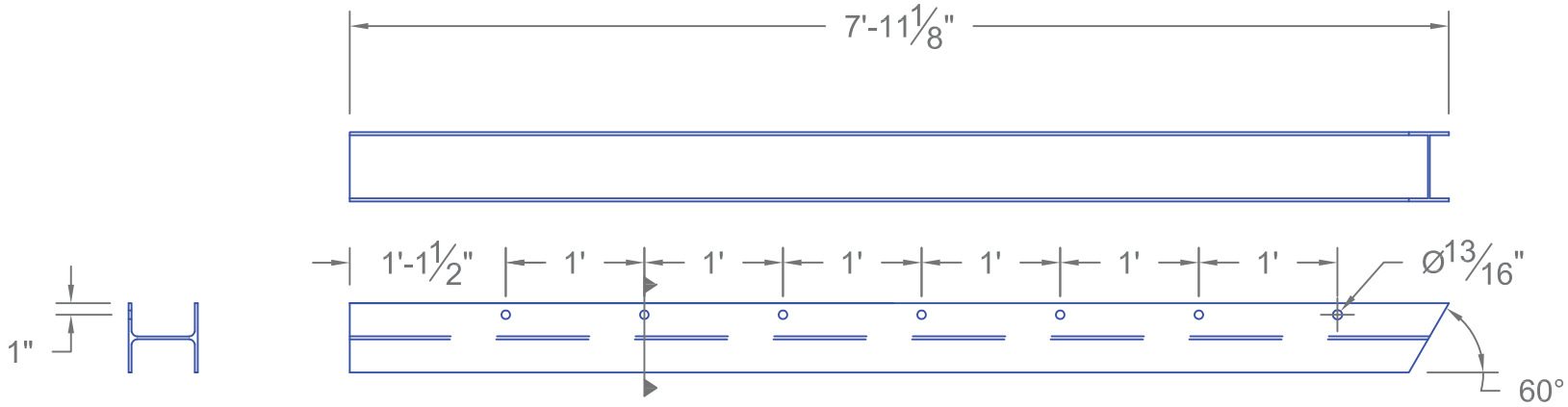

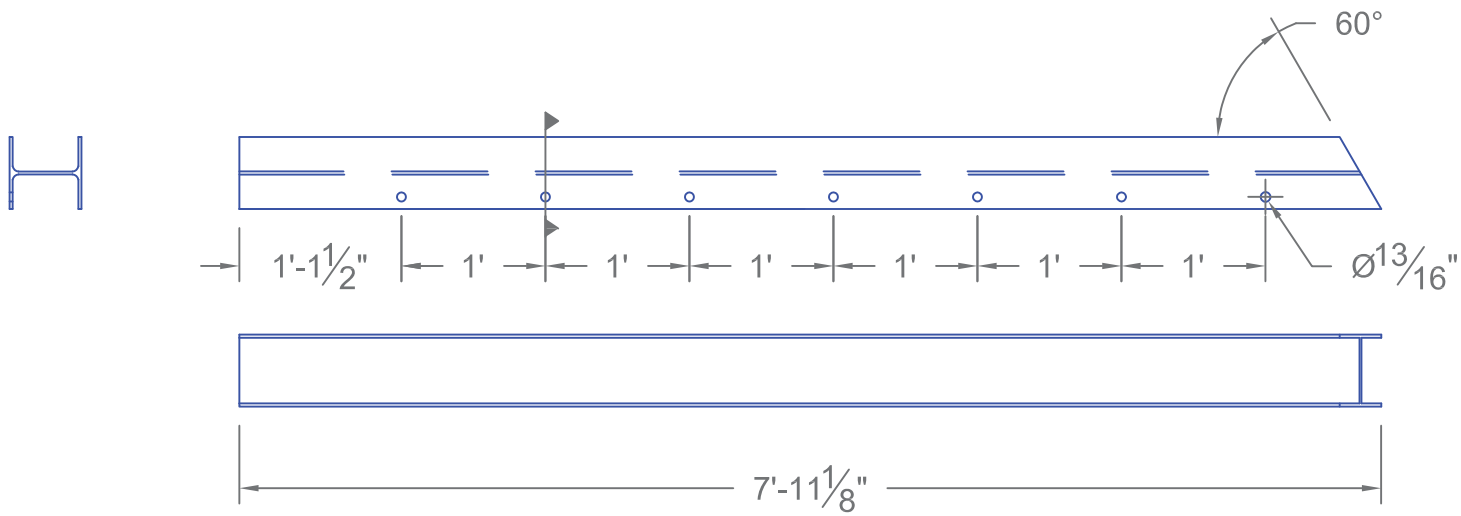

W6x15 Beam (Material A992)
Part 62 [Quantity Needed 1]

Notes:
1. Bolt holes [round] shall be drilled

2. Tolerances:
   2.1. length (+/-$\frac{1}{16}$")
   2.2. round hole placement (+/-$\frac{1}{32}$")

United States Department of State
Bureau of Diplomatic Security
DS/PSD/RD
SA-14, 10th Floor
1400 Wilson Blvd.
Arlington, VA 20520

Project: MGT52_v4	Part(s) Sheet 6
18Apr2013	
scale: N.T.S	

W6x15 Beam (Material A992)
Part 63 [Quantity Needed 1]

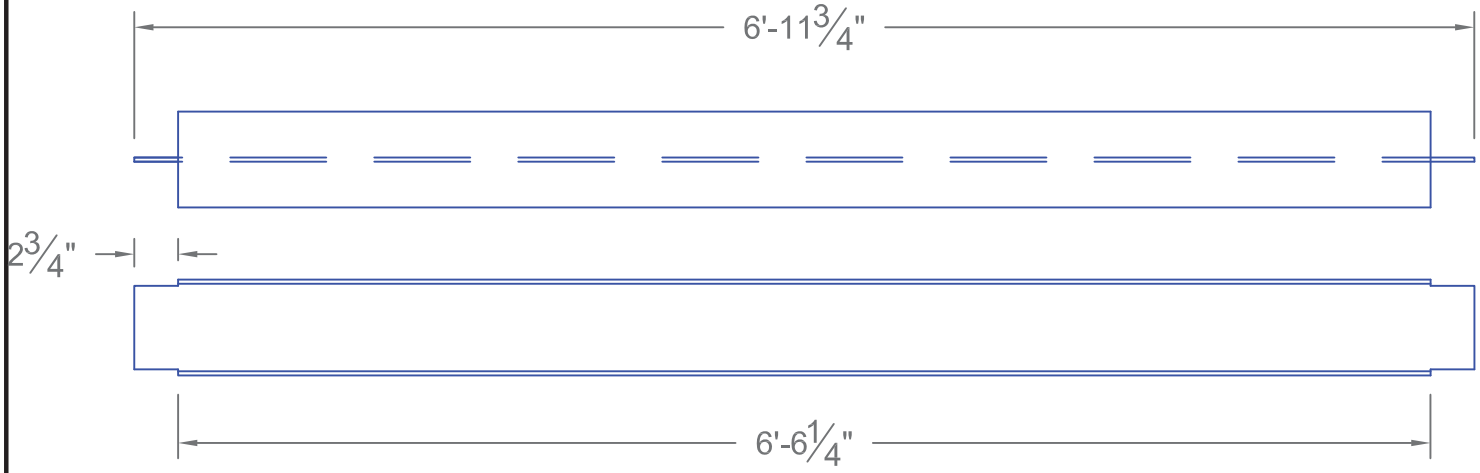

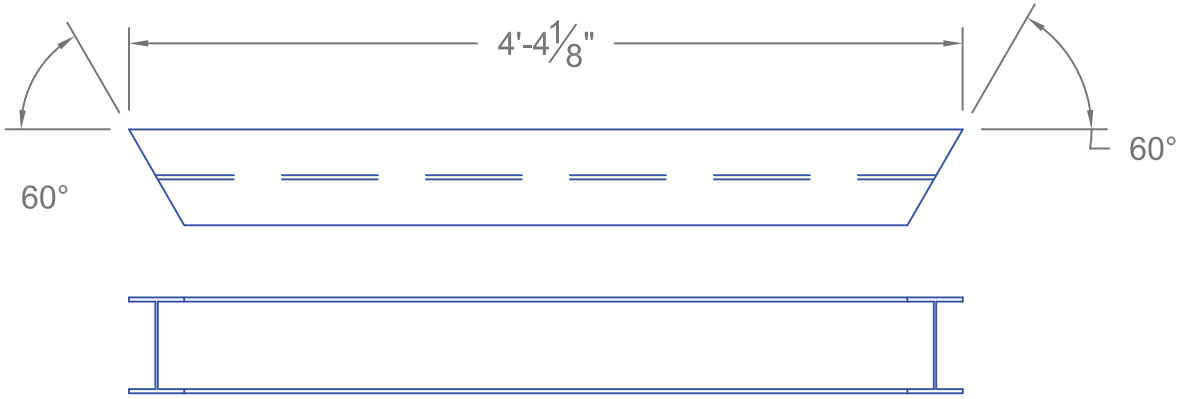

W6x15 Beam (Material A992)
Part 64 [Quantity Needed 2]

Notes:
1. Bolt holes [round] shall be drilled

2. Tolerances:
   2.1. length (+/-$\frac{1}{16}$")
   2.2. round hole placement (+/-$\frac{1}{32}$")

United States Department of State
Bureau of Diplomatic Security
DS/PSD/RD
SA-14, 10th Floor
1400 Wilson Blvd.
Arlington, VA 20520

Project:MGTS2_v4	Part(s) Sheet 7
06Jun2013	
Scale: 1" to 12"	

Parts for Roof Panel

Scale $1\frac{1}{2}$" = 1'

Above: $\frac{1}{2}$" Plate (Material ASTM A36)
Part 25 "Top Back Panel" [Quantity needed 1]

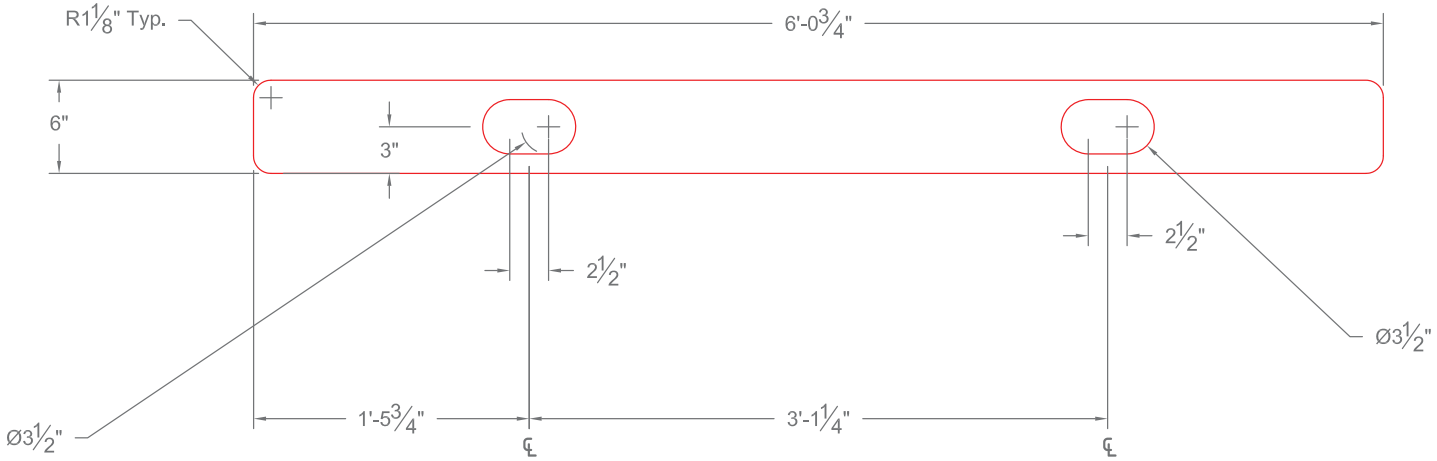

Notes:
1. Reference .DXF Files

2. Tolerances:
   2.1. Standard for CNC Plasma Torch

United States Department of State
Bureau of Diplomatic Security
DS/PSD/RD
SA-14, 10th Floor
1400 Wilson Blvd.
Arlington, VA 20520

ProjectMGTS2_v4	Part(s) Sheet 8
06Jun2013	
Scale: $\frac{1}{2}$" to 12"	

Below: 6x3x$\frac{3}{8}$" Rect. Tube (Material ASTM A500 Gr. B)
Part 21 "Right hand tube" [Quantity needed 1]

Unclassified

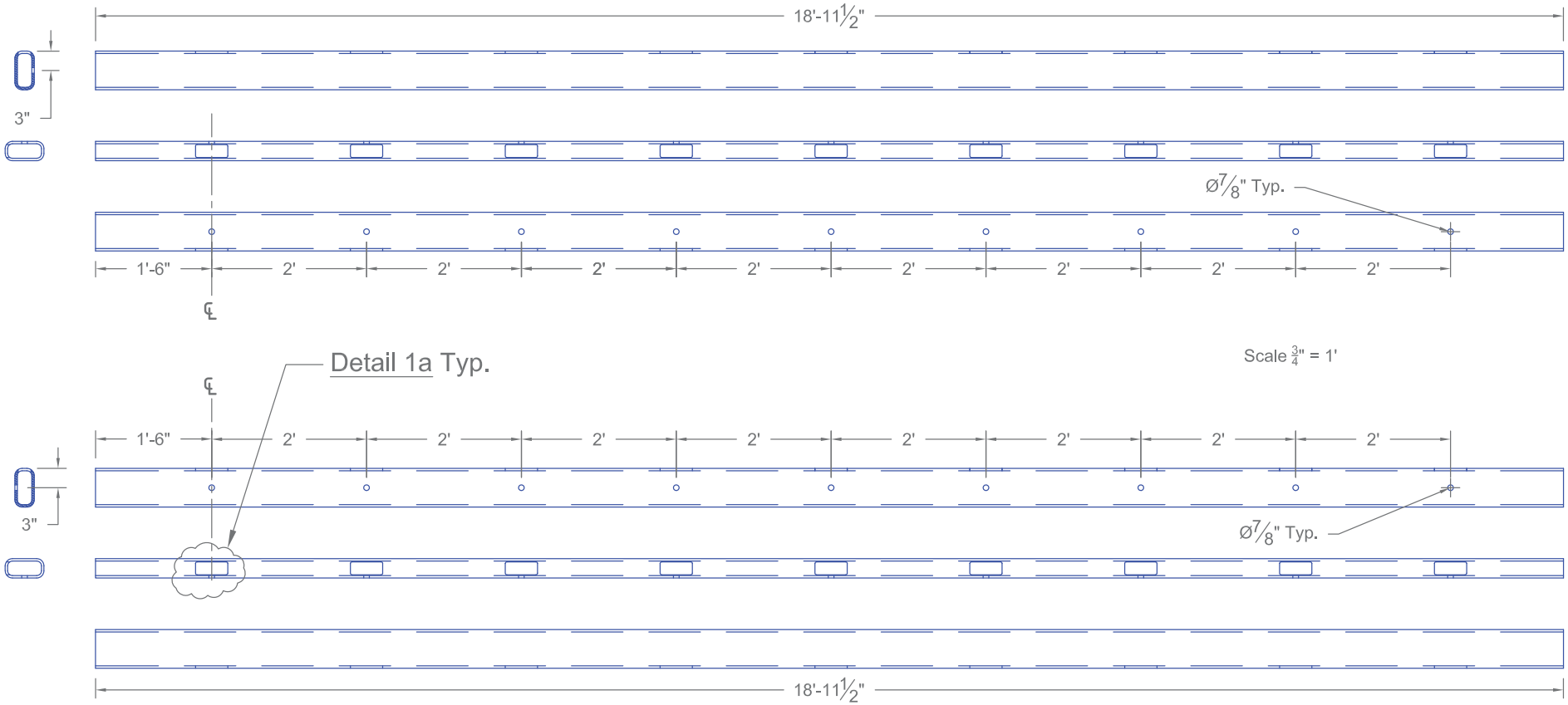

Above: 6x3x$\frac{3}{8}$" Rect. Tube (Material ASTM A500 Gr. B)
Part 22 "Left hand tube" [Quantity needed 1]

Notes:
1. Bolt holes [round] shall be drilled
2. Access holes [square] may be cut by best practice; if torched slag and sharp edges shall be ground off
3. Tolerances:
   3.1. length (+/-$\frac{1}{16}$")
   3.2. round hole placement (+/-$\frac{1}{32}$")
   3.3. square hole placement (+/-$\frac{1}{4}$")

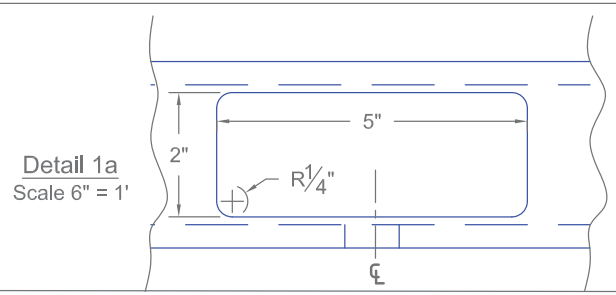

Detail 1a
Scale 6" = 1'

United States Department of State
Bureau of Diplomatic Security
DS/PSD/RD
SA-14, 10th Floor
1400 Wilson Blvd.
Arlington, VA 20520

Project:MGTS2_v4	Part(s)
09Jun2013	Sheet 9
Scale:	

Unclassified

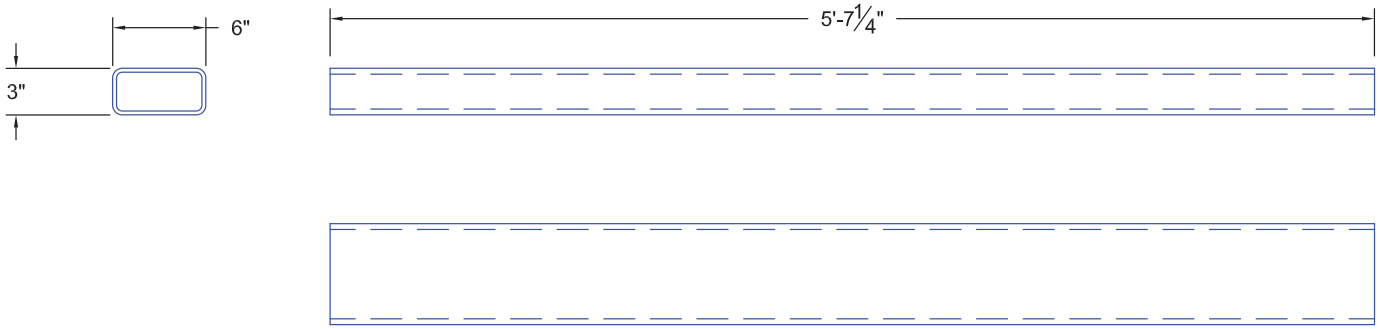

Above: 6x3x$\frac{3}{8}$ Rect. Tube (Material ASTM A36)
Part 26 "Bottom of Rear Face" [Quantity needed 1]

Notes:
1. Tolerances:
2.1. length
(+/-$\frac{1}{16}$")

United States Department of State
Bureau of Diplomatic Security
DS/PSD/RD
SA-14, 10th Floor
1400 Wilson Blvd.
Arlington, VA 20520

ProjectMGTS2_v4	Part(s) Sheet 10
09Jun2013	
Scale: $\frac{1}{4}$" to 12"	

Unclassified

"Rear Panel" w/rebar [Quantity 1]

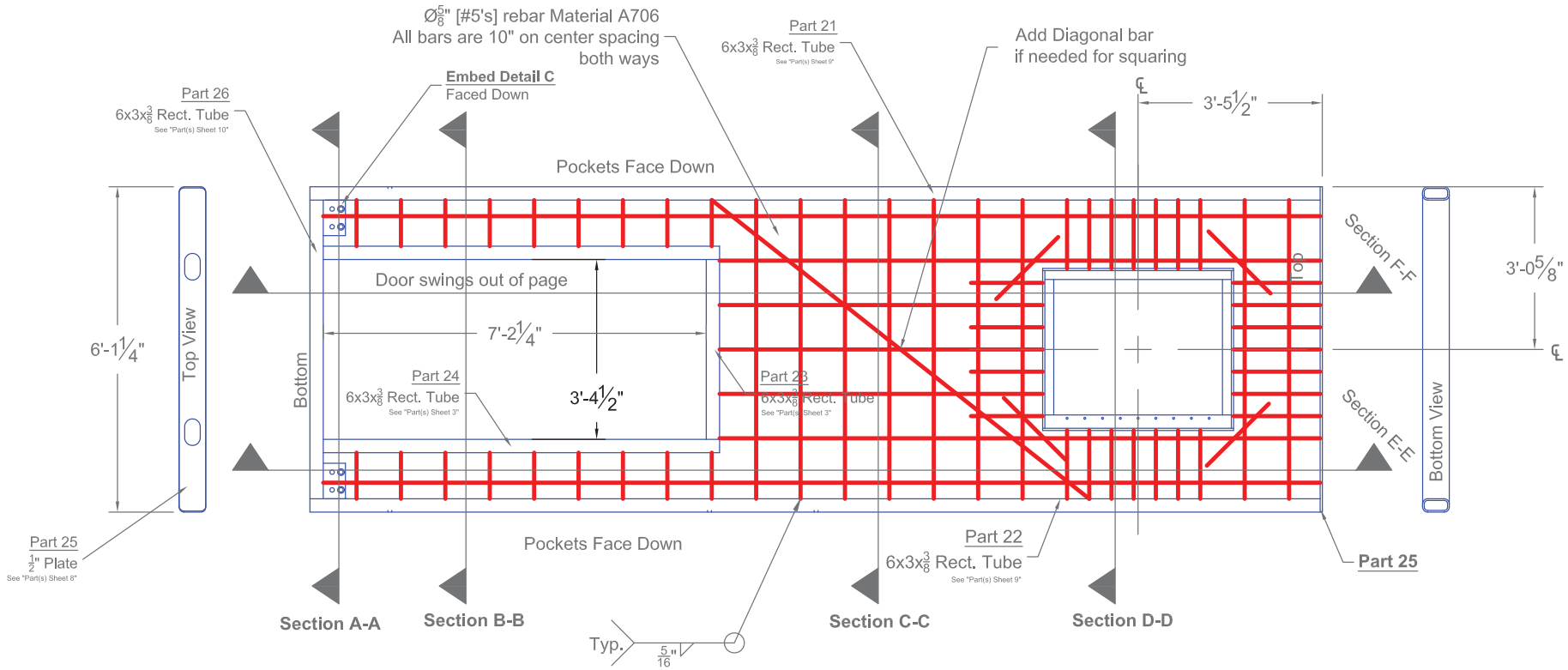

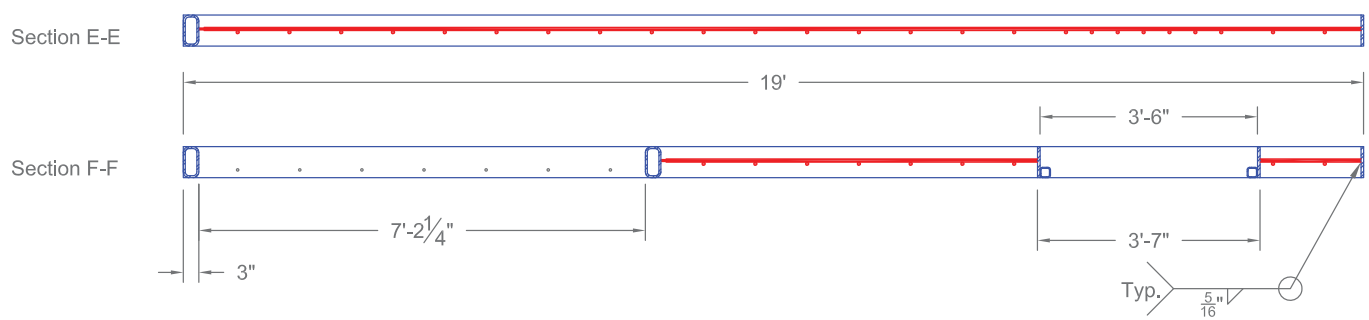

Notes:

United States Department of State
Bureau of Diplomatic Security
DS/PSD/RD
SA-14, 10th Floor
1400 Wilson Blvd.
Arlington, VA 20520

ProjectMGTS2_v4	Rear Panel
06Jun2013	Sheet 1 of 2
Scale: 1/4" to 12"	

Unclassified

Section A-A

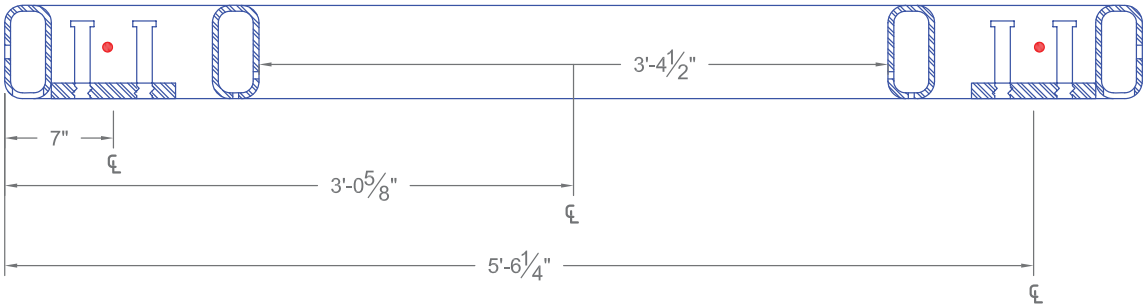

Section B-B

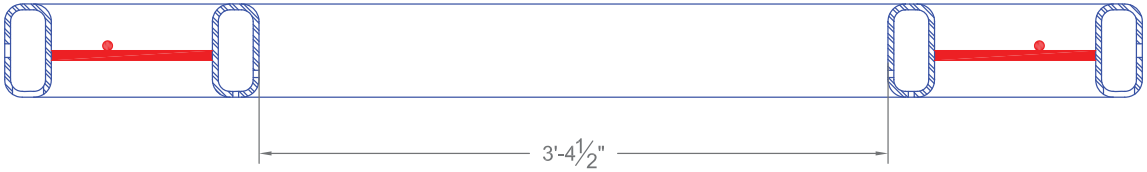

Section C-C

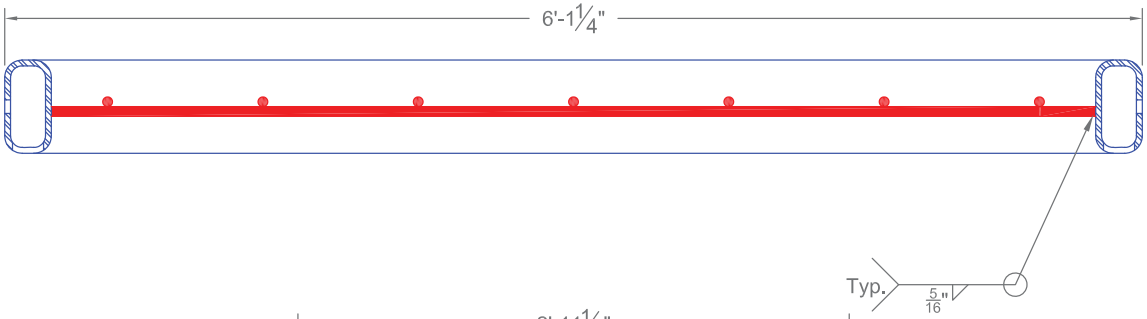

Section D-D

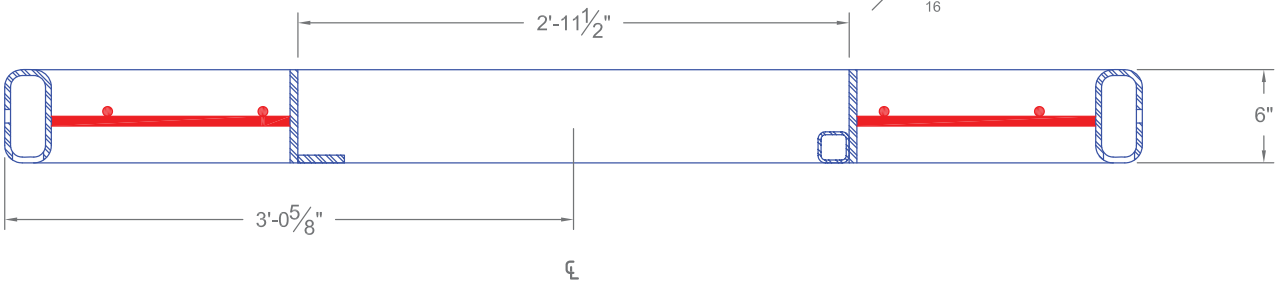

Notes:

United States Department of State
Bureau of Diplomatic Security
DS/PSD/RD
SA-14, 10th Floor
1400 Wilson Blvd.
Arlington, VA 20520

ProjectMGTS2_v4	Rear Panel
06Jun2013	Sheet 2 of 2
scale: ¼" to 12"	